GULLY/PIPE SADDLE CONNECTIONS

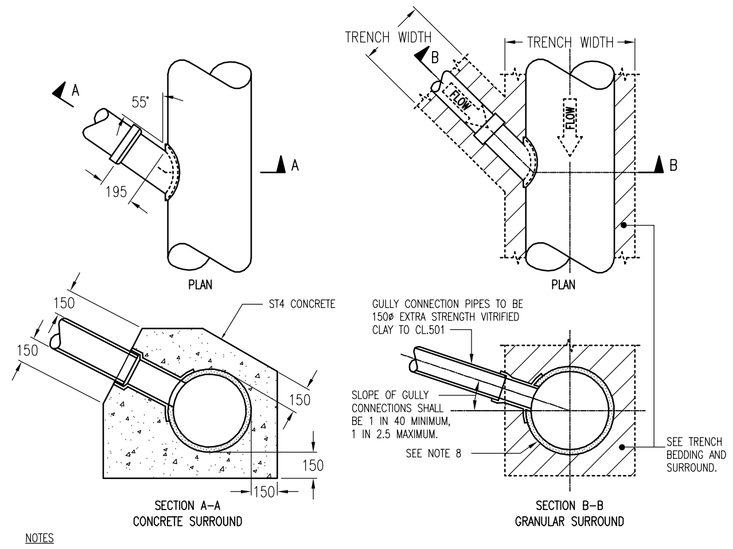

NOTES

1. ALL CONCRETE AND CONCRETE PRODUCTS SHALL BE SULPHATE RESISTING AND/OR CONTAIN SULPHATE RESISTING PORTLAND CEMENT TO BS 4027.

2. THE TRENCH EXCAVATION SHALL BE CARRIED OUT IN ACCORDANCE WITH CL.502.

3. ALL PIPE JOINTING SHALL BE CARRIED OUT IN ACCORDANCE WITH CL.504.

4. BACKFILLING SHALL BE CARRIED OUT IN ACCORDANCE WITH CL.505.

5. TESTING AND CLEANING SHALL BE CARRIED OUT IN ACCORDANCE WITH CL.509.

6. GULLY CONNECTIONS TO SURFACE WATER SEWERS SHALL ONLY BE MADE USING PREFORMED JUNCTIONS MANUFACTURED SPECIFICALLY FOR THE PURPOSE AND TO COMPLY WITH CL.508.

TYPICAL MANHOLE DETAIL – TYPE B
DEPTH FROM COVER LEVEL TO SOFFIT OF PIPE NOT EXCEEDING 3m

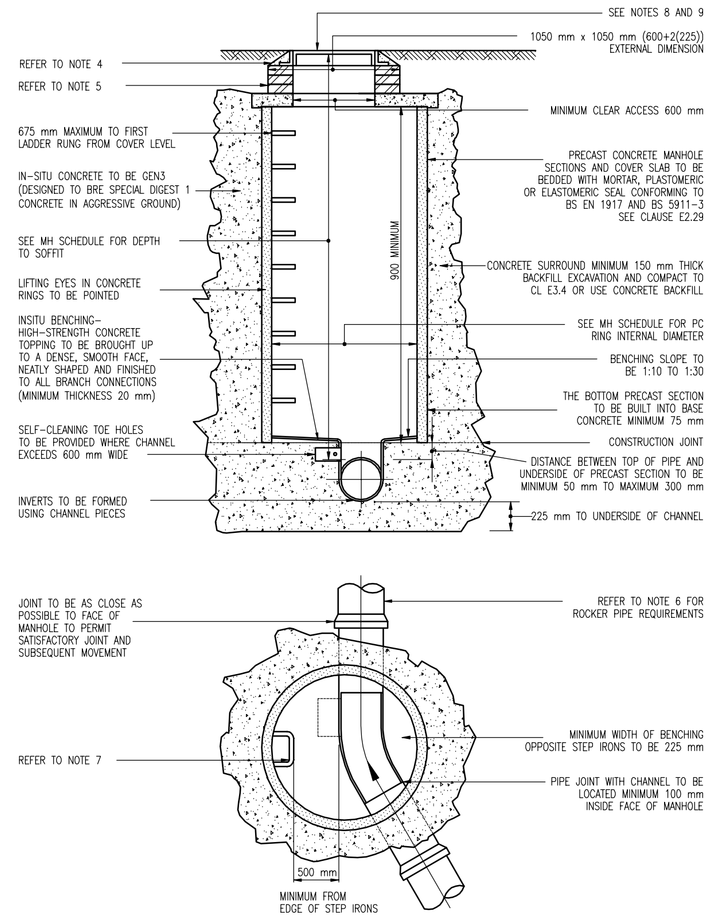

TYPICAL MANHOLE DETAIL – TYPE E
DEPTH OF COVER LEVEL TO SOFFIT OF PIPE 1.0m TO 1.5m

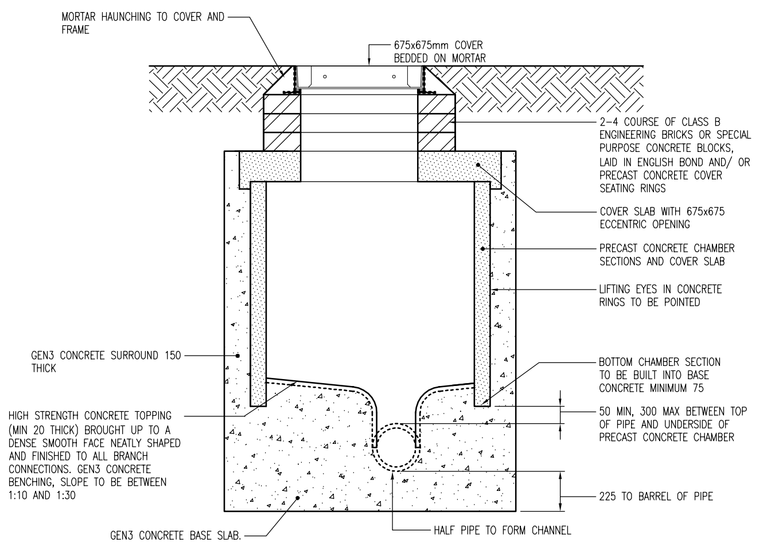

TYPICAL MANHOLE DETAIL – TYPE A
DEPTH FROM COVER LEVEL TO SOFFIT OF PIPE 3m TO 6m

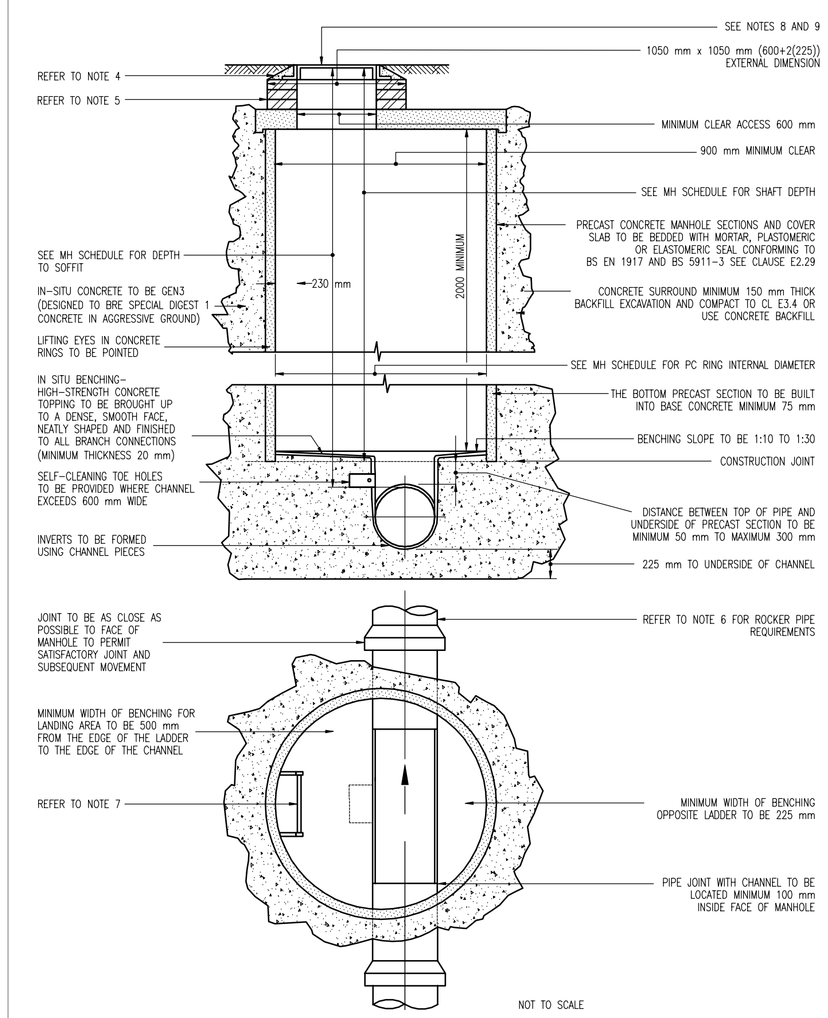

NOT TO SCALE

TRENCH AND BEDDING DETAILS, SEWERS AND DRAINS

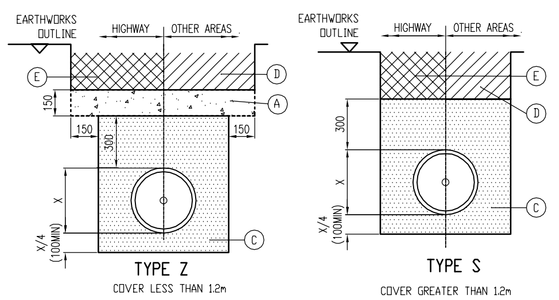

REINFORCEMENT IN SLAB TO MATCH STRUCTURAL LOADINGS

NOTES.

1. TYPE B. DIMENSION 'X' IS THE EXTERNAL DIAMETER OF THE PIPE.

2. FOR TYPE Z TRENCH THE CONCRETE COVER MAY BE FORMED TO A RADIUS, BATTER OR HORIZONTAL SURFACE. MINIMUM COVER OF CONCRETE SHALL BE 150mm.

3. FOR TRENCH TYPES Z FLEXIBLE CONSTRUCTION JOINTS ARE TO BE FORMED IN THE CONCRETE TO COINCIDE WITH EACH PIPE JOINT WITH PREFORMED JOINT FILLER TO CLAUSE 1015 OF THE SPECIFICATION.

4. THE MINIMUM AND MAXIMUM TRENCH WIDTHS ARE AS FOLLOWS:–
MINIMUM= X+300
MAXIMUM= X+600

FOR MEASUREMENT PURPOSES THE VOLUMES OF HARD BREAKOUT OR IMPORTED BACKFILL TO TRENCHES SHALL BE CALCULATED USING THE MEAN OF THE MIN AND MAX TRENCH WIDTHS.

5. BACKFILL ABOVE EARTHWORKS OUTLINE TO MATCH EXISTING/PROPOSED CONSTRUCTION.

6. AS FAR AS POSSIBLE, THE PIPE COVER SHALL BE AT LEAST 1.2m WITHIN THE HIGHWAY OR WHEREVER IT MAY BE SUBJECT TO HEAVY WHEEL LOADS. ELSEWHERE THE MINIMUM COVER SHALL BE 0.9m. IF, AT ANY PLACE, IT SHOULD BE IMPOSSIBLE TO PROVIDE THE COVER SPECIFIED ABOVE, THE PIPE SHALL BE OF EXTRA STRENGTH AND SURROUNDED BY 150mm THICK ST2 CONCRETE AND PROVIDED WITH FLEXIBLE JOINTS AT NO MORE THAN 5m CENTRE.

(A) CONCRETE MIX ST4 TO BS EN 206

(B) CONCRETE MIX ST2 TO BS EN 206

(C) PIPE BEDDING MATERIAL TO CLAUSE 503.3(i) (SHW) EVENLY COMPACTED

(D) CLASS B LOWER TRENCH FILL TO CLAUSE 503.3(iv) (SHW) COMPACTED BY HAND

(E) TRENCH BACKFILL WITHIN THE HIGHWAY TO BE GRANULAR TYPE 2 MATERIAL TO CLAUSE 804 (SHW) CARRIED OUT IN ACCORDANCE WITH CLAUSE 505 (SHW) TRENCH BACKFILL IN OTHER AREAS TO BE ACCEPTABLE MATERIAL (CLASS 1,2 OR 3) COMPACTED TO CLAUSE 505 (SHW)

(F) PIPE BEDDING MATERIAL TO CLAUSE 503.3(i) (SHW)

TYPICAL ACCESS CHAMBER TYPE 3
IN AREAS SUBJECT TO VEHICLE LOADING. MAX 3.0m DEEP (NON ENTRY)

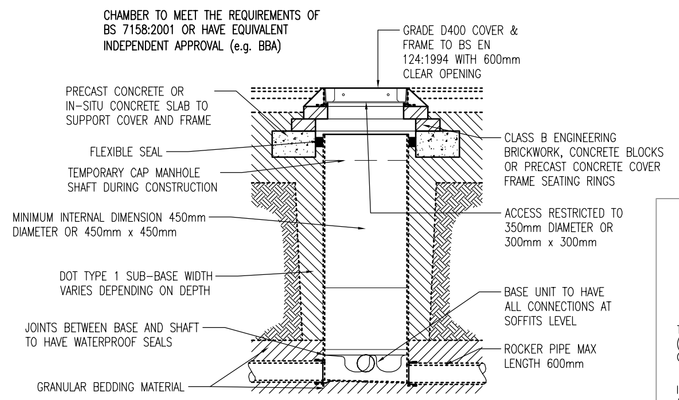

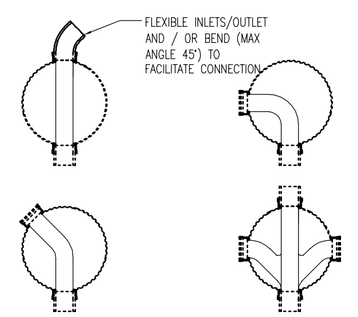

ALTERNATIVE BASE PLAN LAYOUTS. ALL CONNECTIONS TO BE MINIMUM SOFFIT TO SOFFIT

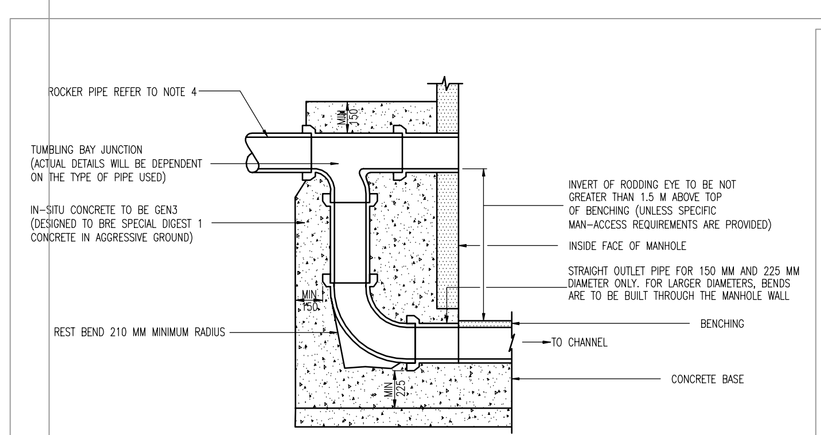

EXTERNAL VERTICAL BACKDROP
TYPE BDV

NOTES

1. DO NOT SCALE. ALL DIMENSIONS IN MILLIMETRES UNLESS OTHERWISE STATED
2. SPECIFICATION
ALL WORKS TO BE IN ACCORDANCE WITH THE RELEVANT PROVISIONS OF THE SPECIFICATION DOCUMENT SEWERS FOR ADOPTION 7TH EDITION. THE CLAUSE NUMBERS REFERED BELOW RELATE TO THE SPECIFICATION ABOVE
3. MANHOLE COVERS AND FRAMES SHALL COMPLY WITH BS EN 124, BS7903 AND CLAUSE E2.32
4. MANHOLE FRAMES SHALL BE SET LEVEL, BEDDED AND HAUNCHED TO CL E6.7
5. MANHOLE FRAME SHALL BE SEATED ON AT LEAST TWO COURSES OF CLASS B ENGINEERING BRICKS TO CL E6.7 AND NOT GREATER AND FOUR BRICKS.
6. FOR ROCKER PIPE DETAILS REFER TO CLAUSE E6.6.2
7. LADDER COMPLYING WITH BS EN 14396 AND CLAUSE E2.37
8. OPENING TO BE LOCATED CENTRALLY OVER 900 mm SHAFT AND OFFSET APPROXIMATELY 200 mm FOR 1200 mm DIAMETER SHAFT.
9. TYPE A AND B MANHOLES ARE TO HAVE 600x600mm COVER AND FRAMES TOGETHER WITH 600x600mm OPENINGS IN THE BRICK/RAISING PIECES, WITH A 750x600mm OPENING IN THE COVER SLAB.
10. MANHOLE COVERS TO CL E2.32–SEE MANHOLE SCHEDULE FOR SIZES

CONCRETE
BURIED CONCRETE , INCLUDING PRECAST CONCRETE TO BE DESIGNED TO BRE DIGEST 1, CONCRETE IN AGRESSIVE GROUND. SULPHATE RESISTING CEMENT SHALL BE USED UNLESS AN ALTERNATIVE IS AGREED WITH THE SUPERVISING OFFICER/ENGINEER

FOR DESIGNED, DESIGNATED OR STANDARDISED PRESCRIBED CONCRETE REFER TO BS EN 206–1 AND BS 8500. THEY SHALL HAVE A 20mm NOMINAL MAXIMUM SIZE OF AGGREGATE, AND A SLUMP CLASS S2 FOR TARGET 70mm AND NO ADMIXTURES

PIPES
CONCRETE PIPES TO BE TO BS EN 1916 & BS 5911–1, CLAYWARE PIPES TO BE TO BS EN 295. DUCTILE IRON PIPES TO BE TO BS EN 598
USE STANDARD HEPWORTH JOINTS.

BACKFILL TO TRENCHES – WITHIN HIGHWAYS
ALL TRENCHES SITUATED WITHIN HIGHWAYS OR PROSPECTIVE HIGHWAYS TO BE BACKFILLED IN ACCORDANCE WITH THE LOCAL HIGHWAY AUTHORITY REQUIREMENTS OR IF NONE AVAILABLE IN ACCORDANCE WITH CLAUSE 3.6.4 OF CESWI, i.e. HAUC SPECIFICATION FOR THE REINSTATEMENT OF OPENINGS IN HIGHWAYS APPENDIX A1 CLASSES A,B,C,D..

BACKFILL TO TRENCHES – OUTSIDE HIGHWAYS BELOW HARD PAVED AREAS
ENGINEER TO AGREE OPTIONS WITH CLIENT
BACKFILL TO BE SAME AS WITHIN HIGHWAYS

GENERAL
ALL WORKS TO BE IN ACCORDANCE WITH THE RELEVANT PROVISIONS OF THE SPECIFICATION DOCUMENT SEWER FOR ADOPTION 6TH EDITION.

BACKFILL TO TRENCHES – OUTSIDE HIGHWAYS BELOW SOFT AREAS
SIDEFILL TO COMPLY WITH SPECIFICATION FOR HIGHWAY WORKS CLASS 8.
BACKFILL TO COMPLY WITH SPECIFICATION FOR HIGHWAY WORKS CLASS 1, 2 OR 3

GRANULAR BEDDING AND SURROUND
GRANULAR BEDDING FOR PIPES AND BACKFILLING MATERIAL FOR TEMPORARY DRAINS (TRENCH SUB–DRAINS), SHALL COMPLY WITH CLAUSE 2.88 OF CESWI, SIZED IN ACCORDANCE WITH THE FOLLOWING TABLE:

NOMINAL BORE OF PIPE (mm)	ALTERNATIVE AGGREGATE SIZES (mm)		CF VALUE MAX
	SINGLE–SIZED	GRADED	
100 150	10	–	0.2
225–300	10 or 14	14 to 5	0.2
375–525	10, 14 or 20 14	14 to 5 or 20 to 5	0.2
EXCEEDING	or 20	14 to 5 or 20 to 5	0.15
	14, 20 or 40	14 to 5, 20 to 5 or 40 to 5	0.5

REFERENCE SHOULD BE MADE TO BS 882 TABLE 4.

TRENCH WIDTH
NOTE THE MAXIMUM TRENCH WIDTH MUST NOT BE EXCEEDED. IF THE WIDTH IS EXCEEDED THE CONTRACTOR MUST SUBMIT REVISED BEDDING PROPOSALS TO THE SUPERVISING OFFICER/ENGINEER.

SOFT SPOTS AND OVERDIG
SOFT SPOTS SHALL BE REMOVED FROM THE BOTTOM OF THE TRENCH AND OTHER EXCAVATIONS AND THEN BE REFILLED TO FORMATION LEVEL WITH THE SAME MATERIAL AS THE PERMANENT WORK WHICH IS TO REST ON THAT FORMATION. OVERDIG SHALL BE TREATED IN THE SAME MANNER AT CONTRACTORS EXPENSE AS INSTRUCTED BY THE SUPERVISING OFFICER/ENGINEER.

INVERT LEVELS
ALL CHANNELS IN CHAMBERS TO HAVE A CONTINUOUS GRADIENT EQUAL TO THE GRADIENT OF THE INCOMING OR OUTGOING PIPE THROUGHOUT THE WIDTH OF THE CHAMBER.

SHORT PIPES AT CHAMBERS/ROCKER PIPES
NOT WITHSTANDING SPECIFIC REQUIREMENTS FOR INDIVIDUAL CHAMBER TYPES ALL PIPES LEADING TO AND FROM CHAMBERS MUST MEET THE REQUIREMENTS OF CLAUSE 5.19 OF CESWI.

MANHOLE CHAMBERS
ALL PIPES SHALL BE LAID SOFFIT TO SOFFIT UNLESS STATED OTHERWISE ON THE MANHOLE SCHEDULE.
MANHOLES, SOAKAWAYS & COVER SLABS TO BE BS EN 1917 AND BS 5911–3.
PREFORMED SWEPT CHANNELS SHALL BE USED AT JUNCTIONS AND NO BRANCH SHALL ENTER AT LESS THAN 90 DEGREES FROM THE OUTGOING SEWER.

MANHOLE ACCESS SIZE
675mm x 675mm IS THE MINIMUM COVER SLAB OPENING. AN ADJUSTING UNIT TO BE USED OR CORBELLED BRICKWORK FOR 600mm x 600mm COVERS.

MANHOLE COVERS
ALL MANHOLE COVERS SHOULD BE IN ACCORDANCE WITH CLAUSE 5.2.32 OF SEWERS FOR ADOPTION AND BE BEDDED AND HAUNCHED IN MORTAR.
ALL COVERS TO ADOPTABLE MANHOLES SHALL BE MARKED FW OR SW IF ON A FOUL OR SURFACE WATER SEWER RESPECTIVELY.
THEY SHALL BE COATED WITH BLACK BITUMINOUS COMPOSITION IN ACCORDANCE WITH BS EN124.
WHERE THERE IS DOUBT AS TO WHICH COVER SHOULD BE USED, A STRONGER CLASS SHOULD BE SELECTED.
INFILL COVERS SHALL NOT BE USED FOR ADOPTABLE SEWERS. WHERE A COVER IS LOCATED IN BLOCK PAVING, THE FRAME SHALL BE 150 DEEP.
FRAMES FOR MANHOLES SHALL BE BEDDED IN POLYESTER RESIN BEDDING MORTAR IN NRSWA CATEGORIES I, II OR III.
WESSEX WATER REQUIRE ALL DEMARCATION CHAMBERS AT THE END OF THE LATERAL DRAINS TO BE FITTED WITH DUCTILE IRON COVERS

ALL MANHOLE FRAMES TO BE SET PARALLEL TO ADJACENT KERBS OR NEAREST BUILDINGS.
MANHOLE COVERS AND FRAMES TO BE FLUSH WITH SURFACE ±5mm MAX.

CONCRETE PROTECTION TO PIPES
TO BE IN ACCORDANCE WITH CLAUSE 5.3 OF CESWI. AT THE DISCRETION OF THE ENGINEER, AWAY FROM CHAMBERS AND WHERE GROUND CONDITIONS PERMIT THE LENGTH OF UNINTERRUPTED CONCRETE PROTECTION MAY BE INCREASED TO 8m.

COMPRESSIBLE FILLER FOR PIPELINES.
TO BE USED TO INTERRUPT CONCRETE PROTECTION TO PIPELINES AND SHALL COMPLY WITH CLAUSE 2.19 OF CESWI.

PIPELINE ABBREVIATIONS ON DRAINAGE DRAWINGS
1.010 225mm Ø 1:100 CLAY 40.00m
LENGTH
MATERIAL
GRADIENT
DIAMETER
PIPE CODE

DRAINAGE CCTV RECORD
ALL HIGHWAY DRAINS ARE TO BE CCTV RECORDED AND A REPORT TO SHALL BE SUPPLIED TO THE SCC FOR APPROVAL. THIS SHOULD BE DONE BEFORE THE SURFACE COURSE IS LAID.

SCC REQUIREMENTS

1. MANHOLES SHALL BE CONSTRUCTED IN ACCORDANCE WITH 'SEWERS FOR ADOPTION – 7TH EDITION' AND GULLIES IN ACCORDANCE WITH ESTATE ROADS IN SOMERSET, OR VOLUME 3 (HCD) OF THE MCHW WITH PARTICULAR REFERENCE TO ROAD GULLY CONSTRUCTION NOTES (SCC MARCH 2004).
2. ALL HIGHWAY DRAINS ARE TO BE CCTV RECORDED AND A REPORT TO SHALL BE SUPPLIED TO THE SCC FOR APPROVAL. THIS SHOULD BE DONE BEFORE THE SURFACE COURSE IS LAID.
3. GULLY POTS SHOULD BE POSITIONED SUCH THAT THE INSIDE EDGE OF THE POT LINES UP WITH THE FRONT OF THE KERB WITH A TOLERANCE OF +/–50mm.
4. ALL GULLY COVERS ARE TO BE CAPTIVE HINGED AND SET TO CLOSE AGAINST ONCOMING TRAFFIC.
5. PEDESTRIAN TYPE GULLY GRATINGS ARE TO BE USED WHEREVER GULLIES COINCIDE WITH DROPPED KERBS.
6. AS FAR AS POSSIBLE, THE PIPE COVER SHALL BE AT LEAST 1.2m WITHIN THE HIGHWAY OR WHEREVER IT MAY BE SUBJECT TO HEAVY WHEEL LOADS. ELSEWHERE THE MINIMUM COVER SHALL BE 0.9m. IF, AT ANY PLACE, IT SHOULD BE IMPOSSIBLE TO PROVIDE THE COVER SPECIFIED ABOVE, THE PIPE SHALL BE OF EXTRA STRENGTH AND SURROUNDED BY 150mm THICK ST2 CONCRETE AND PROVIDED WITH FLEXIBLE JOINTS AT NO MORE THAN 5m CENTRE.

REV	DATE	BY	DESCRIPTION	CHK	APP.
G	16.05.2017	NLD	ISSUED FOR PLANNING APPROVAL	JG	KM
F	08/05/2017	NLD	ISSUED FOR TENDER	JG	KM
E	09/02/2017	JG	THIRD ISSUE FOR S104 APPROVAL	JG	KM
D	20/01/2017	JL	ISSUED FOR STAGE 2 COUNCIL COMMENTS	JG	KM
C	24/08/2016	JG	SECOND ISSUE FOR S104 APPROVAL	KM	GD
B	11/07/2016	JG	AMENDED TO STAGE 2 RSA	KM	GD
A	26/02/2016	JG	FIRST ISSUE FOR S104 APPROVAL	KM	GWW

DRAWING STATUS:
PLANNING APPLICATION

WSP
Keble House, Southernhay Gardens, Southernhay East, Exeter, EX1 1NT
Tel: +44 (0)1392 267500 Fax: +44 (0)1392 267599
http://www.wspgroup.com

CLIENT:
KIAFIELD PROPERTIES LTD

ARCHITECT:
FARRELL CLARK LLP ARCHITECTS

PROJECT:
INDUSTRIAL ESTATE, ROYSTON

TITLE:
S104 DRAINAGE
STANDARD DETAIL SHEET

SCALE @ A1:	CHECKED:	APPROVED:
AS SHOWN	KM	GWD
CAD FILE:	DESIGN-DRAWN:	DATE:
01334-SD-201	JG	November 2015
PROJECT No:	DRAWING No:	REV:
60001334	01334/SD/201	G

© WSP Group Ltd