TYPICAL DETAIL OF OUTFALL TO WATERCOURSE / POND
SUITABLE FOR OUTFALL PIPES OF LESS THAN 350mm

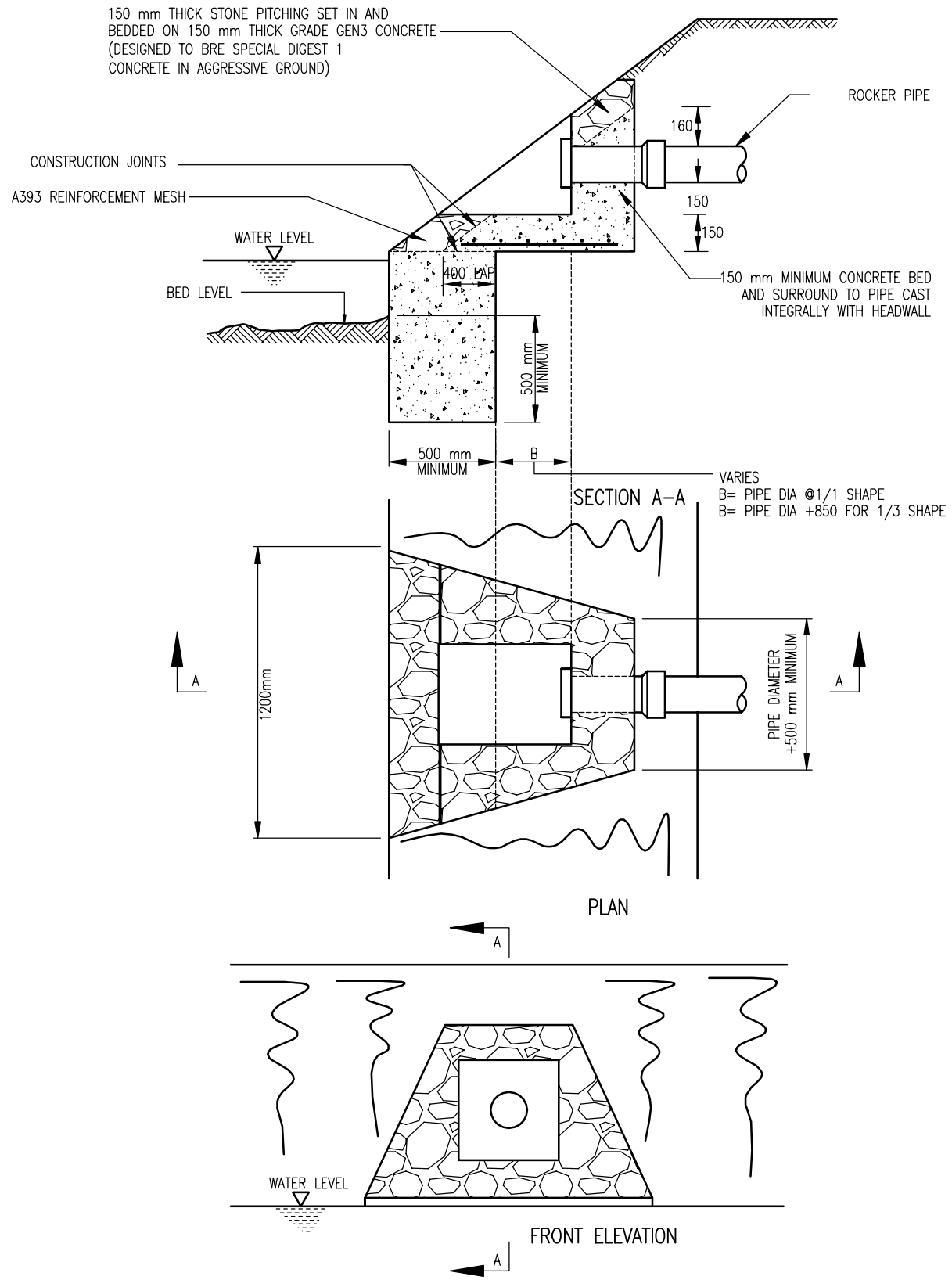

NOTES

1. DO NOT SCALE. ALL DIMENSIONS IN MILLIMETRES UNLESS OTHERWISE STATED

REV	DATE	BY	DESCRIPTION	CHK	APD
G	24.05.2017	NLD	ISSUED FOR TENDER PART 2	JG	KM
F	16.05.2017	NLD	ISSUED FOR PLANNING APPROVAL	JG	KM
E	08.05.2017	NLD	ISSUED FOR TENDER	JG	KM
D	20/01/2017	JL	ISSUED FOR STAGE 2 COUNCIL COMMENTS	JG	KM
C	11/07/2016	JG	AMENDED TO STAGE 2 RSA	KM	GD
B	23/02/2016	JG	SECOND SUBMISSION TO HCC	KM	GD
A	28/10/2015	JG	FIRST ISSUE TO HCC FOR TECHNICAL APPROVAL	KM	GD

DRAWING STATUS:
TENDER DRAWING

WSP
Keble House, Southernhay Gardens, Southernhay East, Exeter, EX1 1NT
Tel: +44 (0)1392 267500 Fax: +44 (0)1392 267599
http://www.wspgroup.com

CLIENT:
KIAFIELD PROPERTIES LTD

ARCHITECT:
FARRELL CLARK LLP ARCHITECTS

PROJECT:
INDUSTRIAL DEVELOPMENT, ROYSTON

TITLE:
TYPICAL DETAIL OF OUTFALL TO WATERCOURSE

SCALE @ A3:	CHECKED:	APPROVED:
NTS	KM	GD
CAD FILE:	DESIGN-DRAWN:	DATE:
01334-SD-105.dwg	JG	May 2017

PROJECT No:	DRAWING No:	REV:
60001334	01334-SD-105	G

© WSP Group Ltd.

P:\60001334 – Royston Industrial Development\E Models and Drawings\Development\AUTOCAD\REVISED FOLDER SET UP\Standard Details\01334-SD-105.dwg 24/5/2017 12:13 PM Mogford, Connor