Belvedere House
Victoria Avenue
Harrogate, HG1 1EL

D13

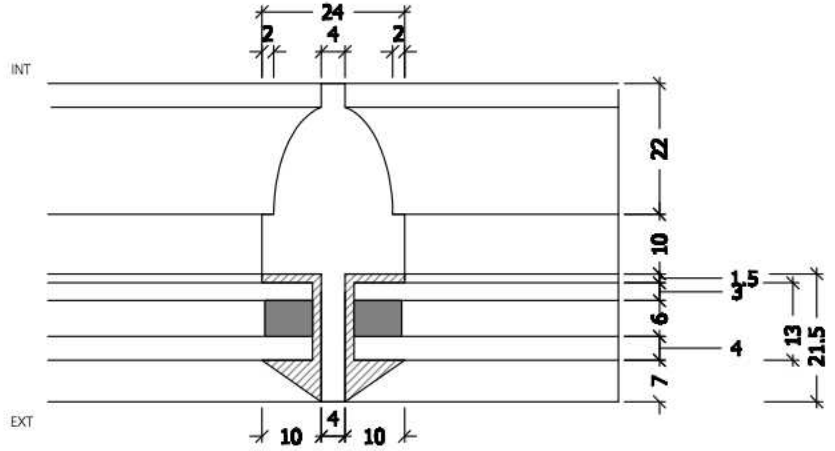

D13

Thickness	3-6-4mm (13mm)
Weight	17.5kg/m.sq
U-value	1.5 (W/m2K)

All images and text © Histoglass Ltd.