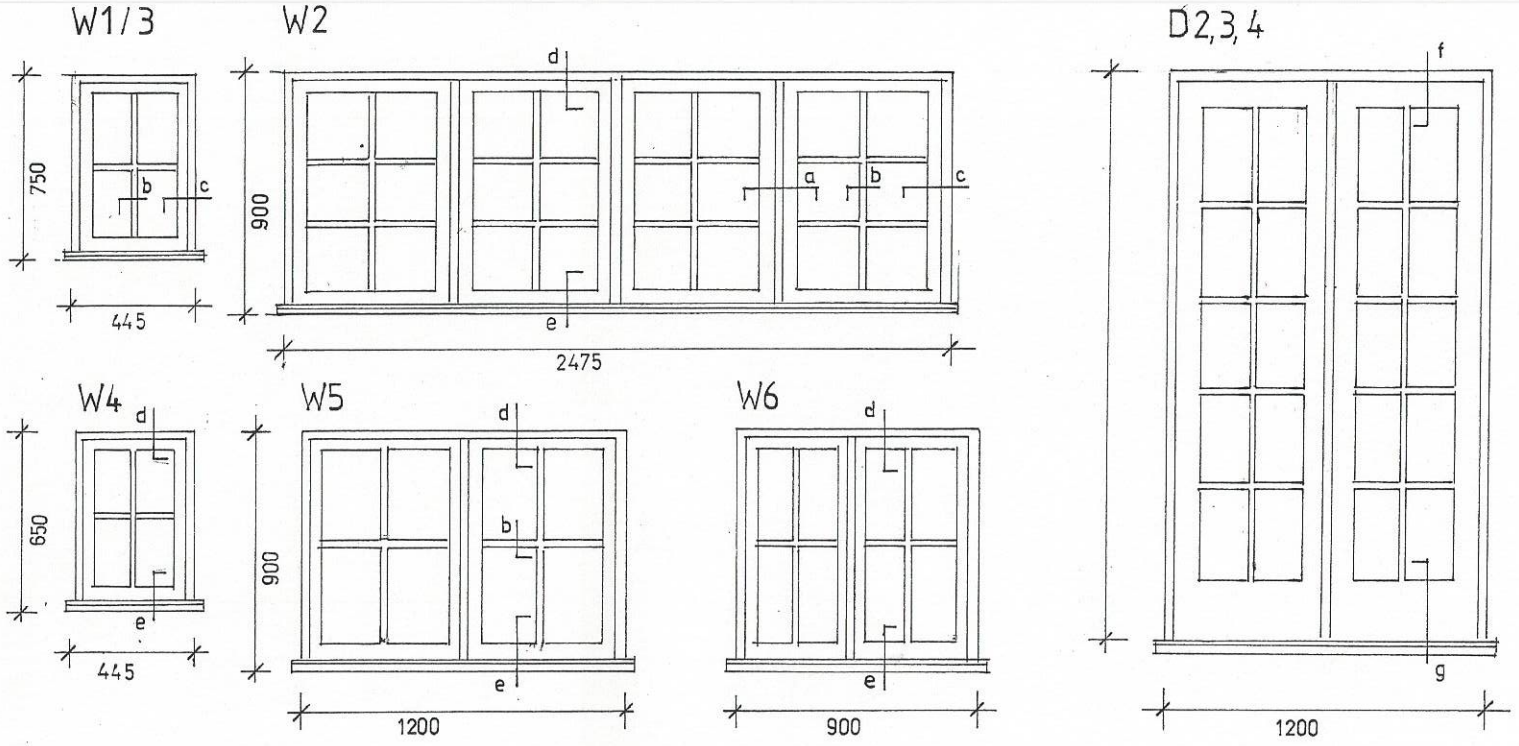

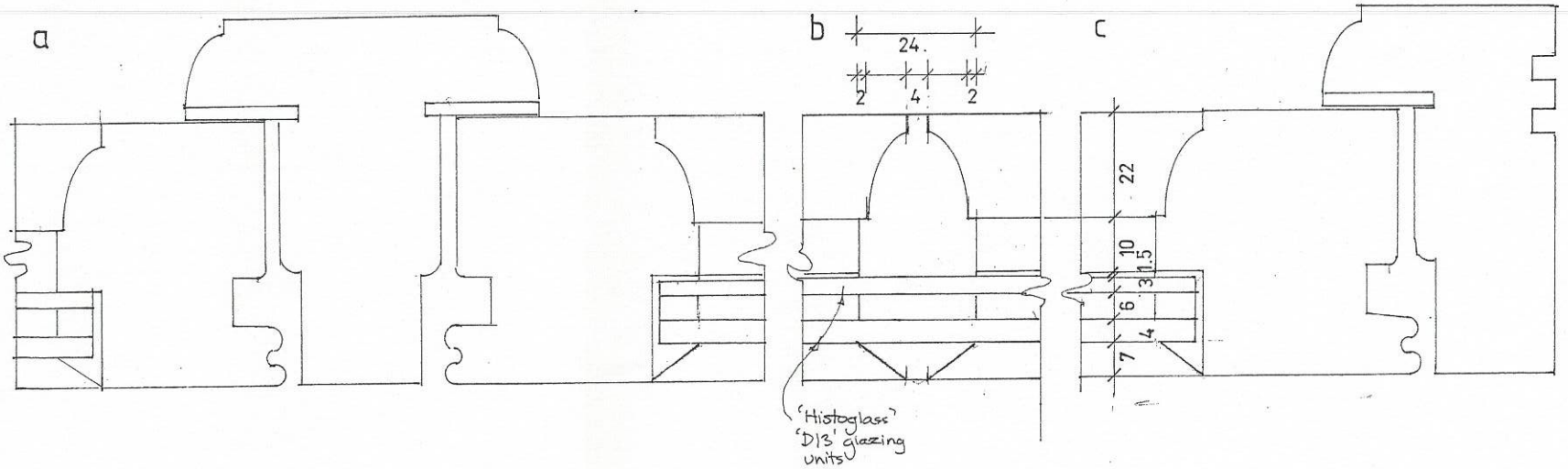

Wilson MacGarry Architects
11 Church Street
Thriplow
Nr. Royston
Herts SG8 7RE
Tel : 01763 208002
e-mail: p@macgarry.com
website: wilson.macgarry.com

JOB

RAMBLERS
HIGH ST BARLEY
HERTS SG8 8JA

DRAWING

JOINERY DETAILS

DATE	SCALE
9 / 7 / 18	1:20, 1:1

DRG. NO.

316 / 09