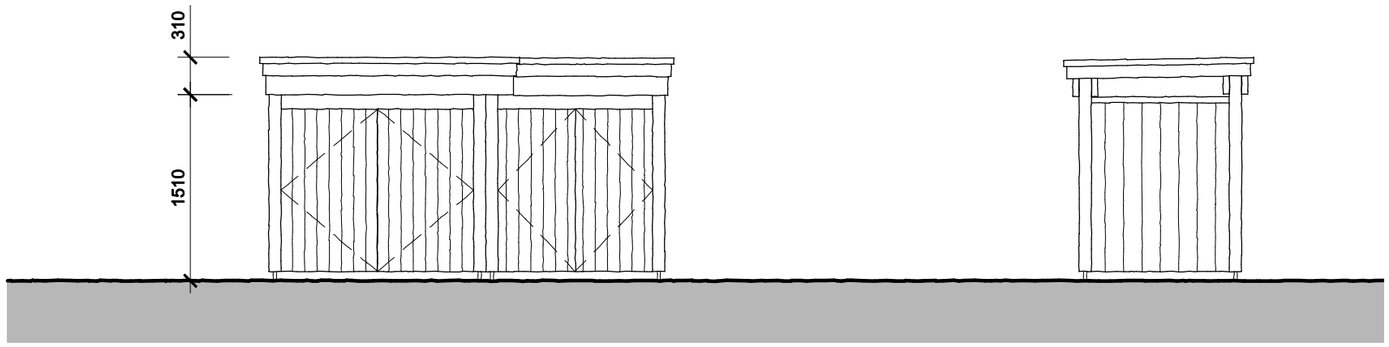

Front Elevation

Side Elevation
(west facing)



Rear Elevation

Side Elevation
(east facing)

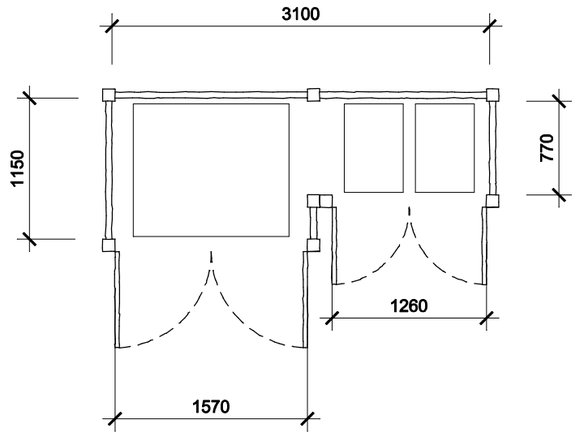

Plan

Notes:

This scheme is subject to Town Planning and all other necessary consents.

This drawing is a print and must not be scaled from without reference being made to the accompanying scale bar. Dimensions and levels, where given, are to be checked on site.

This drawing is to be read in conjunction with all other consultants' and specialiists' drawings and documents and any discrepancies are to be reported to the architect prior to commencement of the relevant work.

Materials and the workmanship of all relevant trades shall comply fully with the British Standards.

This drawing remains the copyright of Boyd Seddon Architect.

METERS	0	0.5	1	1.5	2
1:50					
1:100					
	0	1	2	3	4

REV	DATE	
A	19.01.15	layout amended
B	27.01.15	heights amended
C	29.01.15	overall size reduced

BOYD SEDDON Architect
RIBA • ARB

10 Periwinkle Lane • Hitchin • Herts • SG5 1TY
Tel 07880 720711
Email boyd.seddon@virginmedia.com

CLIENT

GKKM Ltd

PROJECT

Former Sailor Boy Public House
95 Woolgrove Road
Hitchin
SG4 0AU

DRAWING TITLE

CONVERSION TO RETAIL UNIT

bin collection store details

SCALE	1:50 at A3	DRAWING NUMBER	REVISION
DATE	Jan 2014	PL-04	C
DRAWN	bjs		
JOB NUMBER	13107		