This drawing is the property of Technical Signs and must not be reproduced in part or in full without prior consent of Technical Signs.

Existing

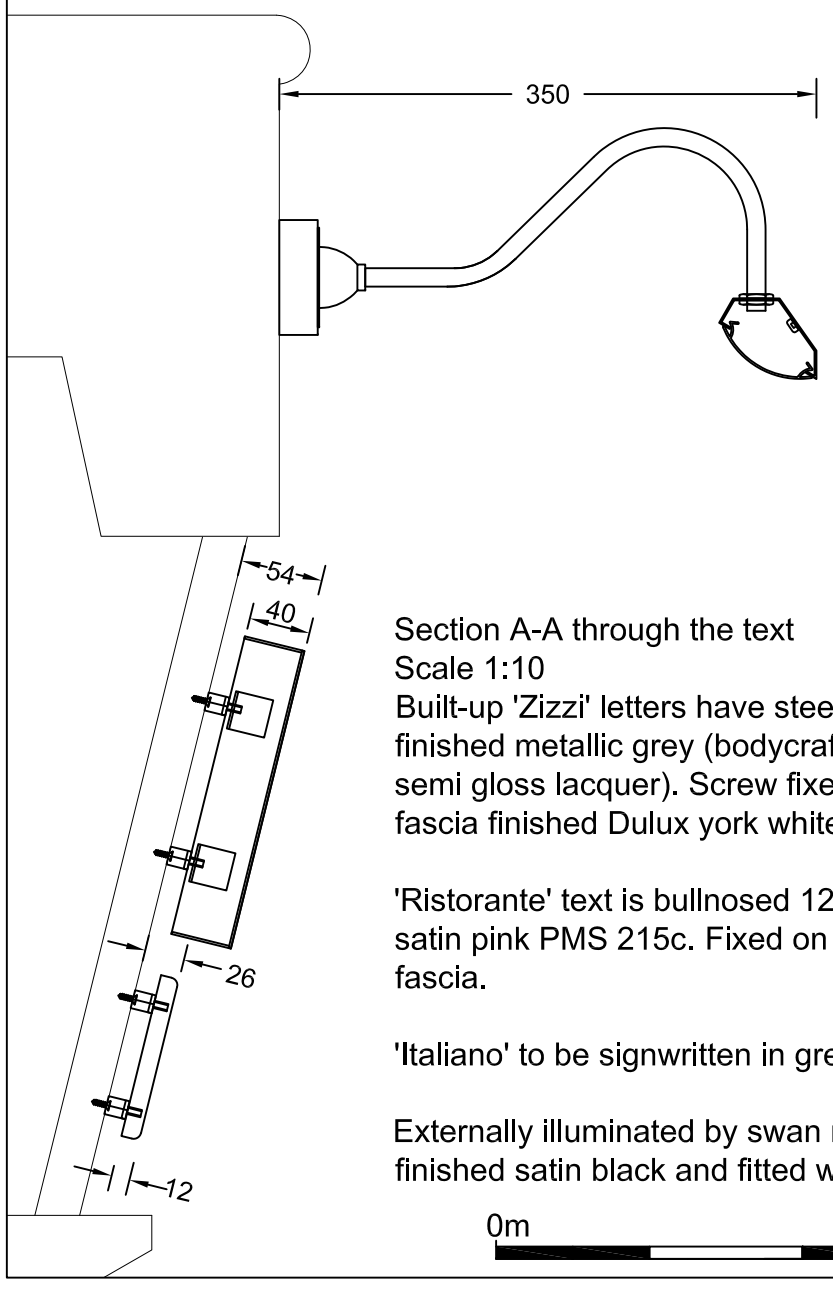

Section A-A through the text
Scale 1:10
Built-up 'Zizzi' letters have steel faces and returns finished metallic grey (bodycraft basecoat C2-261 with a semi gloss lacquer). Screw fixed on locators to a timber fascia finished Dulux york white 20YY 69/120.

'Ristorante' text is bullnosed 12mm Trovidur finished satin pink PMS 215c. Fixed on locators to the timber fascia.

'Italiano' to be signwritten in grey Dulux 90BG 48/057.

Externally illuminated by swan necked trough lights finished satin black and fitted with warm white LEDs.

0m 0.3m

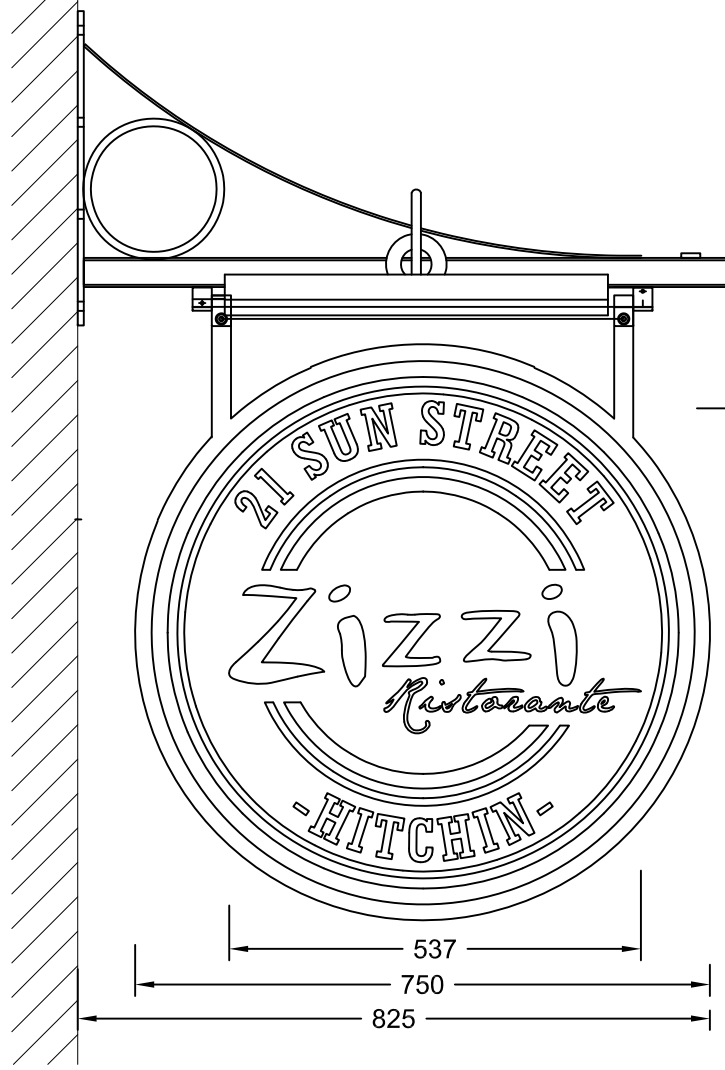

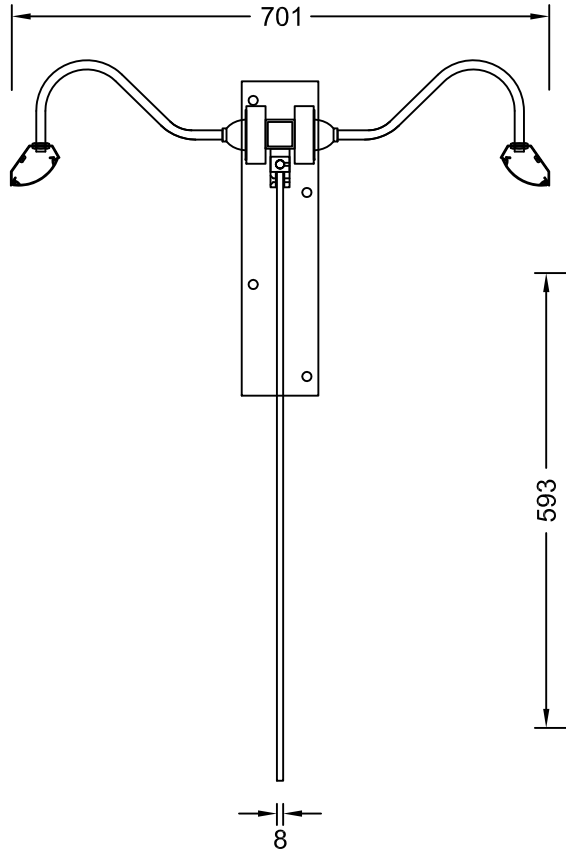

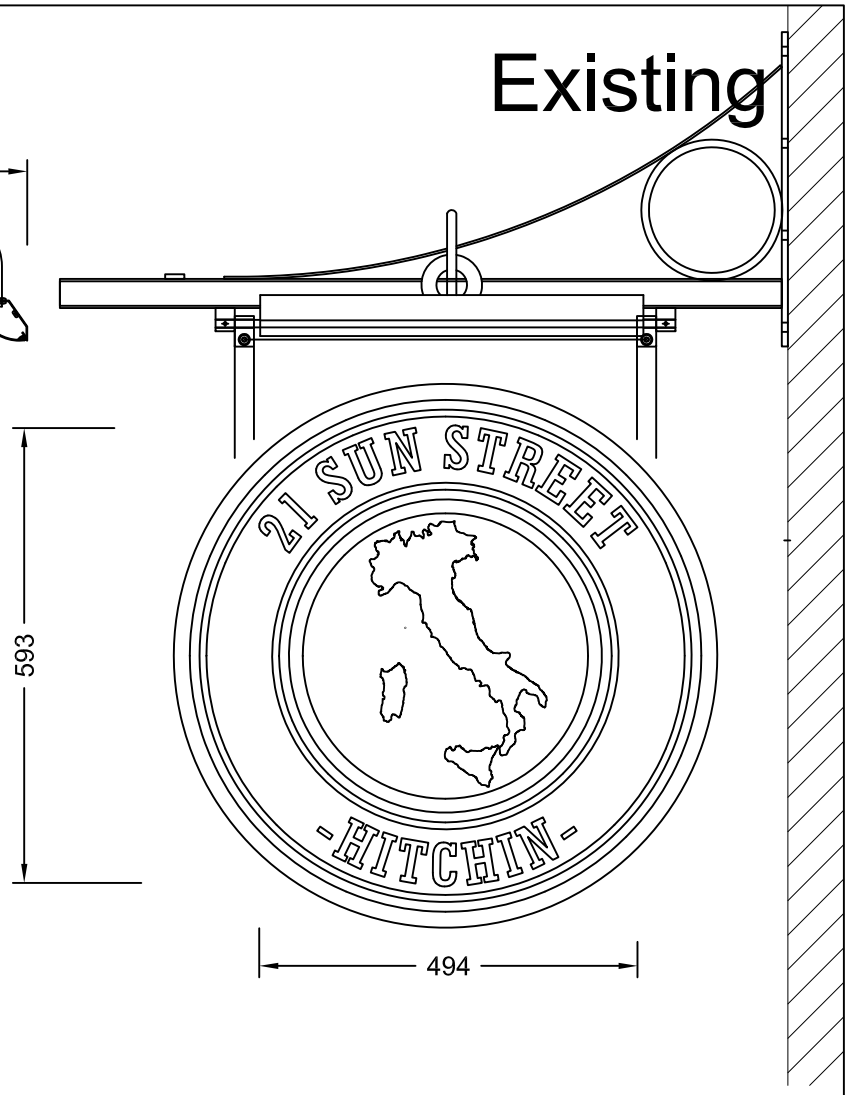

Projected sign - 2 off
Scale 1:10
Flat cut 8mm aluminium hanging sign is finished Dulux york white 20YY 69/120.
Grey and pink vinyl text are applied to both sides - different graphics on each side.
Sign fitted to a black steel projecting arm.
Externally illuminated by black swan necked trough lights fitted with warm white LEDs.

0m 0.5m

Technical Signs
Floor 1 - Unit 3
Hille Business Centre
132 St Albans Road
Watford, Herts, WD24 4AE
Tel: 01923 811999
Fax: 01923 811998
E-mail: info@technicalsigns.co.uk

Client Zizzi
Address/Job details
21-23 Sun Street
Hitchin
SG5 1AH

Existing Signage

Job No 3361
Drawn by DN
Date 27/02/18
Scale As specified (A3)
Drawing No 595878-2
Rev