This drawing is the property of Technical Signs and must not be reproduced in part or in full without prior consent of Technical Signs.

Proposed

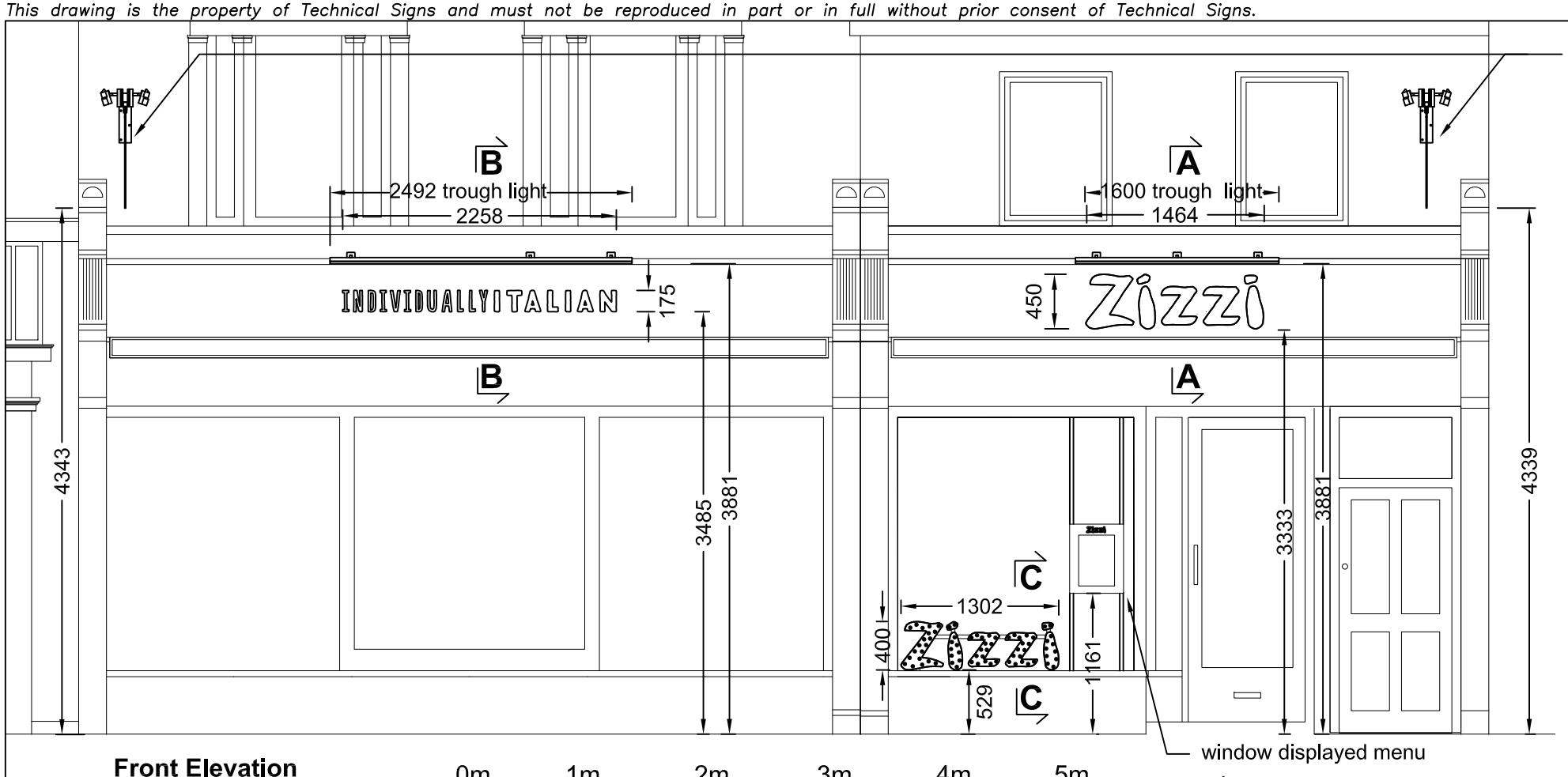

Front Elevation
Scale 1:50

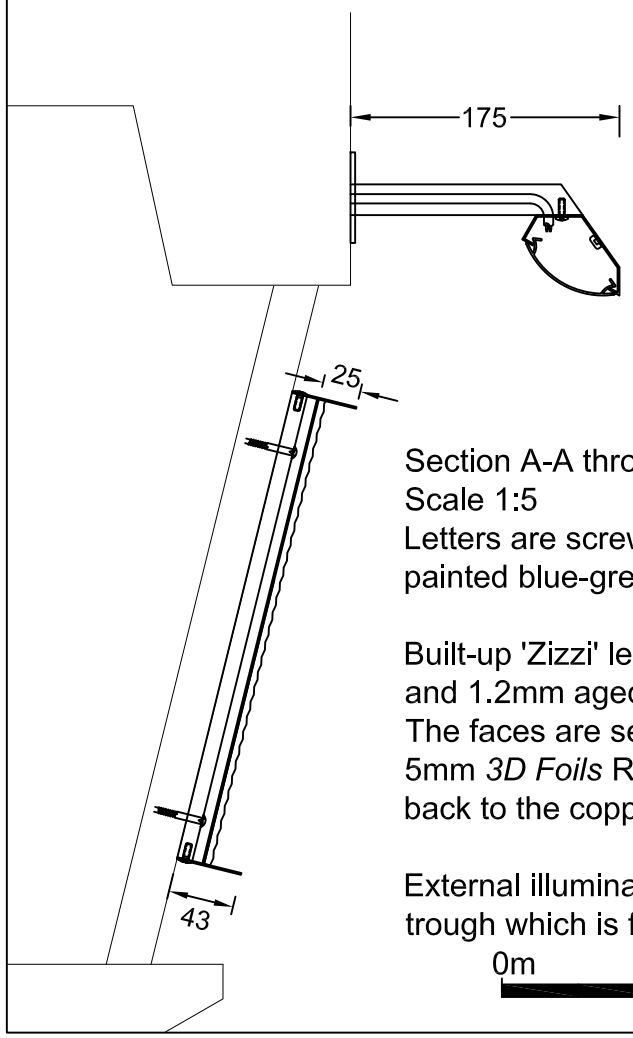

Section A-A through the text
Scale 1:5
Letters are screw fixed to the timber fascia which is painted blue-grey RAL 5008.

Built-up 'Zizzi' letters have 1.2mm polished copper faces and 1.2mm aged copper returns.
The faces are set back within the returns.
5mm *3D Foils* R Glas 100 Pyramid clear faces are fixed back to the copper faces with clear silicone.

External illumination is from a blue-grey RAL 5008 steel trough which is fitted with low energy warm white LEDs.

0m 0.3m

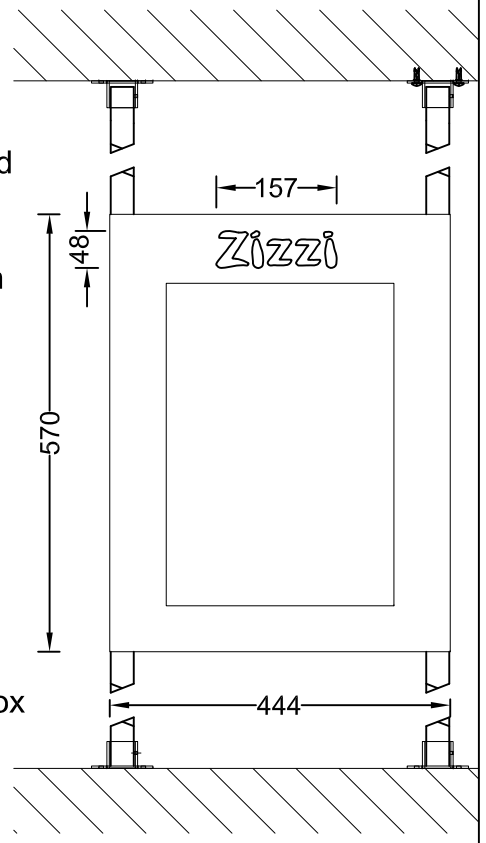

Window displayed menu - 1 off
Scale 1:10
Folded and welded 1.2mm descaled stainless steel box is finished blue-grey RAL 5008.
Fret cut text has push through 5mm cream acrylic.
Box is fitted with a rear hinge and standard cam locks.
Window is backed up with a 6mm clear toughened glass panel.
3mm opal acrylic insert with a clear acrylic face.
Menu fitted with low energy warm white LEDs.
Vertical 30x30mm SHS brushed stainless steel posts fit within the box and sit immediately behind the glazing.

0m 0.5m

Technical Signs
Floor 1 - Unit 3
Hille Business Centre
132 St Albans Road
Watford, Herts, WD24 4AE
Tel: 01923 811999
Fax: 01923 811998
E-mail: info@technicalsigns.co.uk

Client	Zizzi
Address/Job details	21-23 Sun Street Hitchin SG5 1AH Proposed Signage
Job No	3361
Drawn by	DN
Date	27/02/18
Scale	As specified (A3)
Drawing No	595878-3
Rev	