This drawing is the property of Technical Signs and must not be reproduced in part or in full without prior consent of Technical Signs.

Proposed

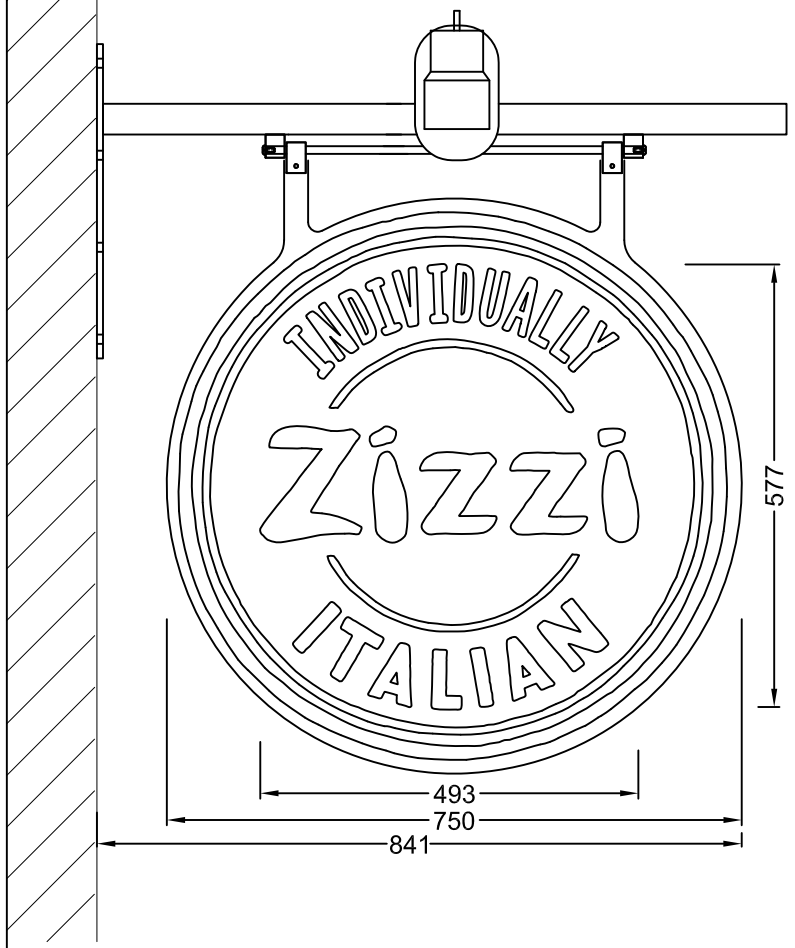

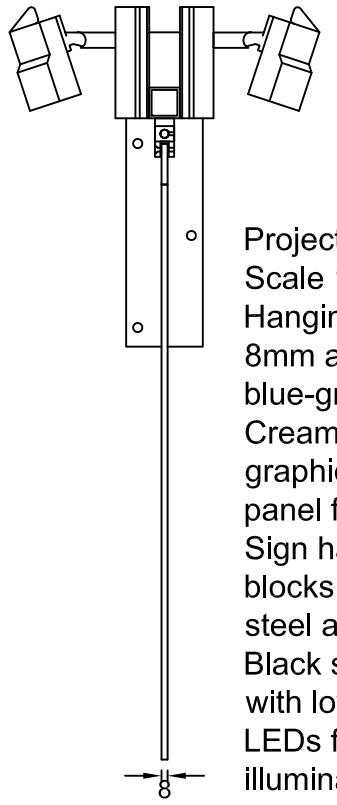

Projected sign - 2 off
Scale 1:10
Hanging panel is flat cut 8mm aluminium finished blue-grey RAL 5008.
Cream PMS 7527c vinyl graphics are applied to the panel faces.
Sign hangs from swing blocks welded to a black steel arm.
Black spot lights are fitted with low energy warm white LEDs for external illumination.

0m 0.5m

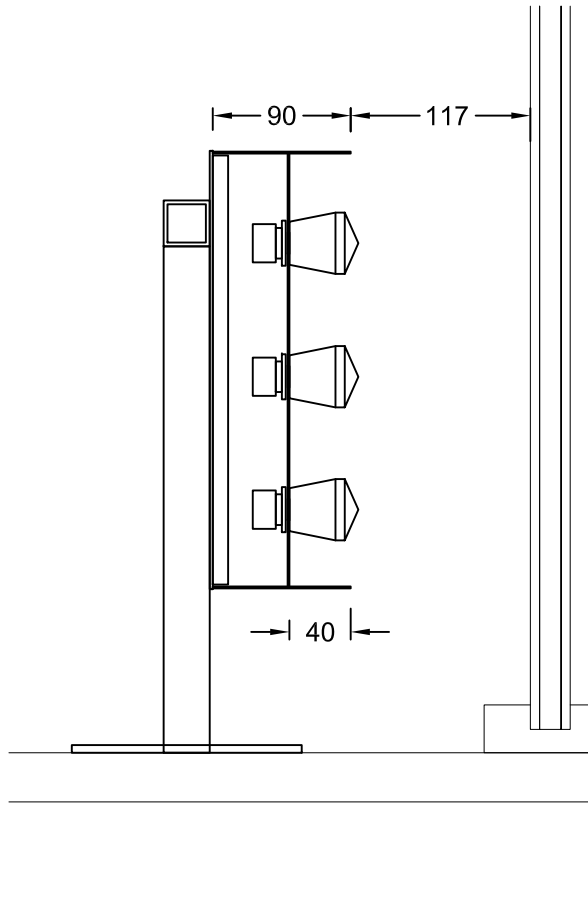

Section C-C through the text
Scale 1:5
Letters fixed behind the glazing.
Built-up 'Zizzi' letters have 1.2mm polished copper faces and 1.2mm aged copper returns.
The faces are set back within the returns and are fitted with 40Ø 12V clear fairground lights which have warm white LEDs.
Flat cut 2mm steel backs finished blue-grey RAL 5008 are welded to a horizontal 30x30mm SHS steel rail which is finished blue-grey RAL 5008.
Rail has two vertical legs which screw fix into the window cill.

0m 0.3m

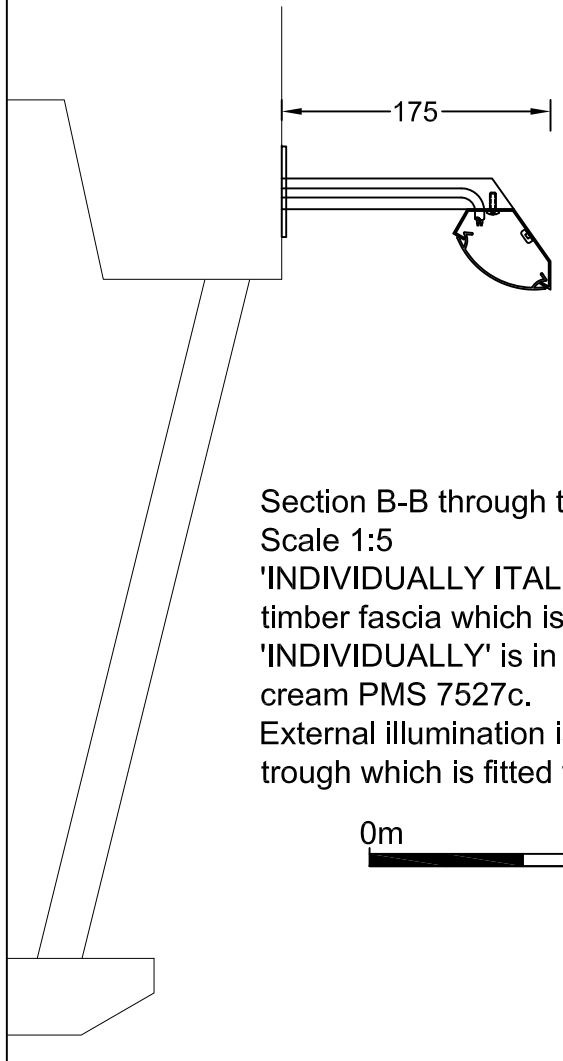

Section B-B through the text
Scale 1:5
'INDIVIDUALLY ITALIAN' letters are signwritten to the timber fascia which is painted blue-grey RAL 5008.
'INDIVIDUALLY' is in pink PMS 2031c and the 'ITALIAN' is cream PMS 7527c.
External illumination is from a blue-grey RAL 5008 steel trough which is fitted with low energy warm white LEDs.

0m 0.3m

Technical Signs
Floor 1 - Unit 3
Hille Business Centre
132 St Albans Road
Watford, Herts, WD24 4AE
Tel: 01923 811999
Fax: 01923 811998
E-mail: info@technicalsigns.co.uk

Client Zizzi
Address/Job details
21-23 Sun Street
Hitchin
SG5 1AH

Proposed Signage

Job No 3361
Drawn by DN
Date 27/02/18
Scale As specified (A3)
Drawing No 595878-4
Rev