This drawing must not be copied without the consent of Home Extension Team
The contractor is responsible for taking and checking all dimensions and angles

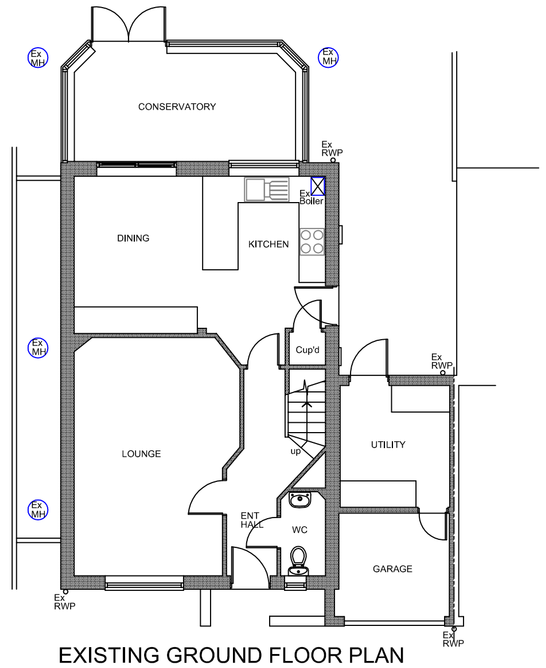

EXISTING GROUND FLOOR PLAN

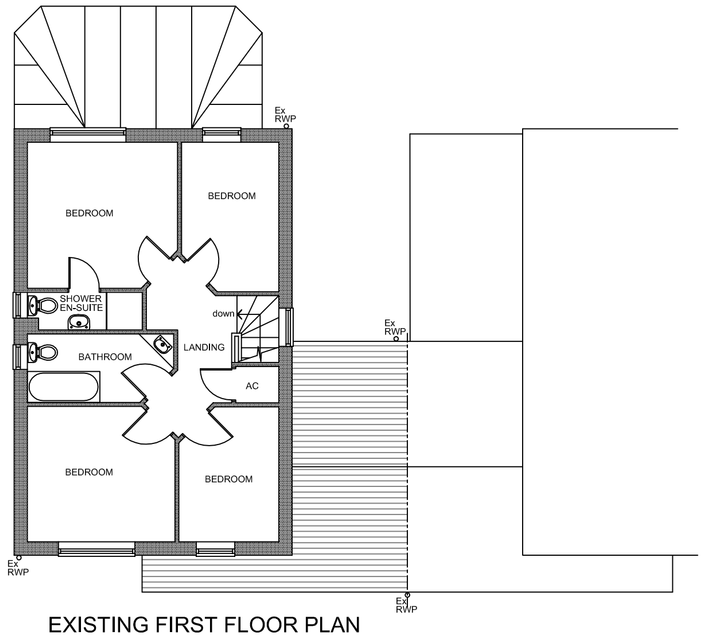

EXISTING FIRST FLOOR PLAN

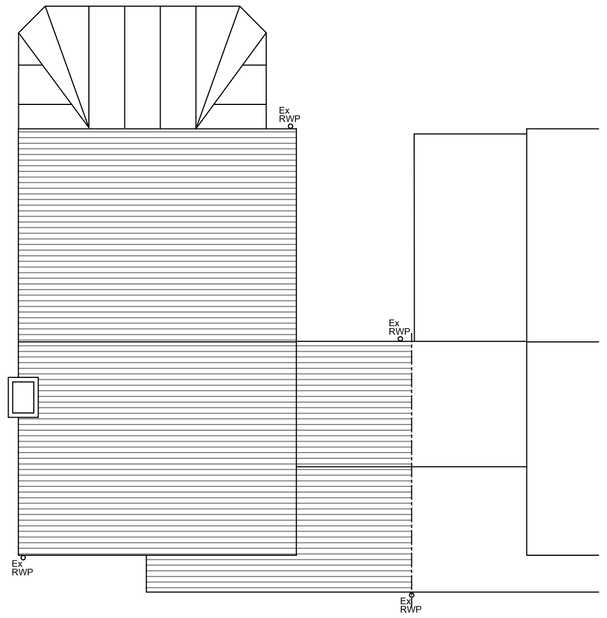

EXISTING ROOF PLAN



EXISTING NORTH WEST ELEVATION



EXISTING SOUTH WEST ELEVATION



EXISTING NORTH EAST ELEVATION



EXISTING SOUTH EAST ELEVATION

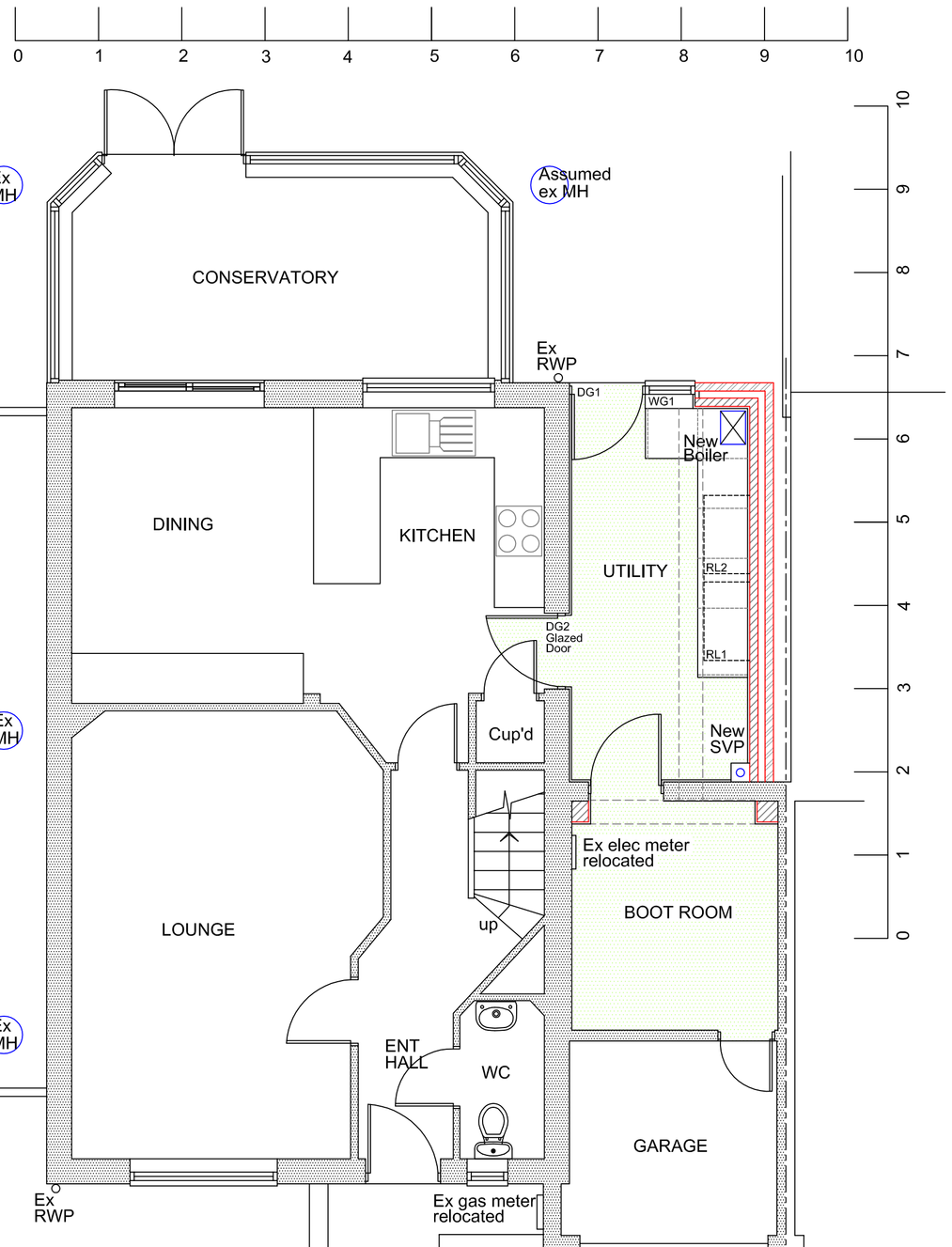

PROPOSED GROUND FLOOR PLAN

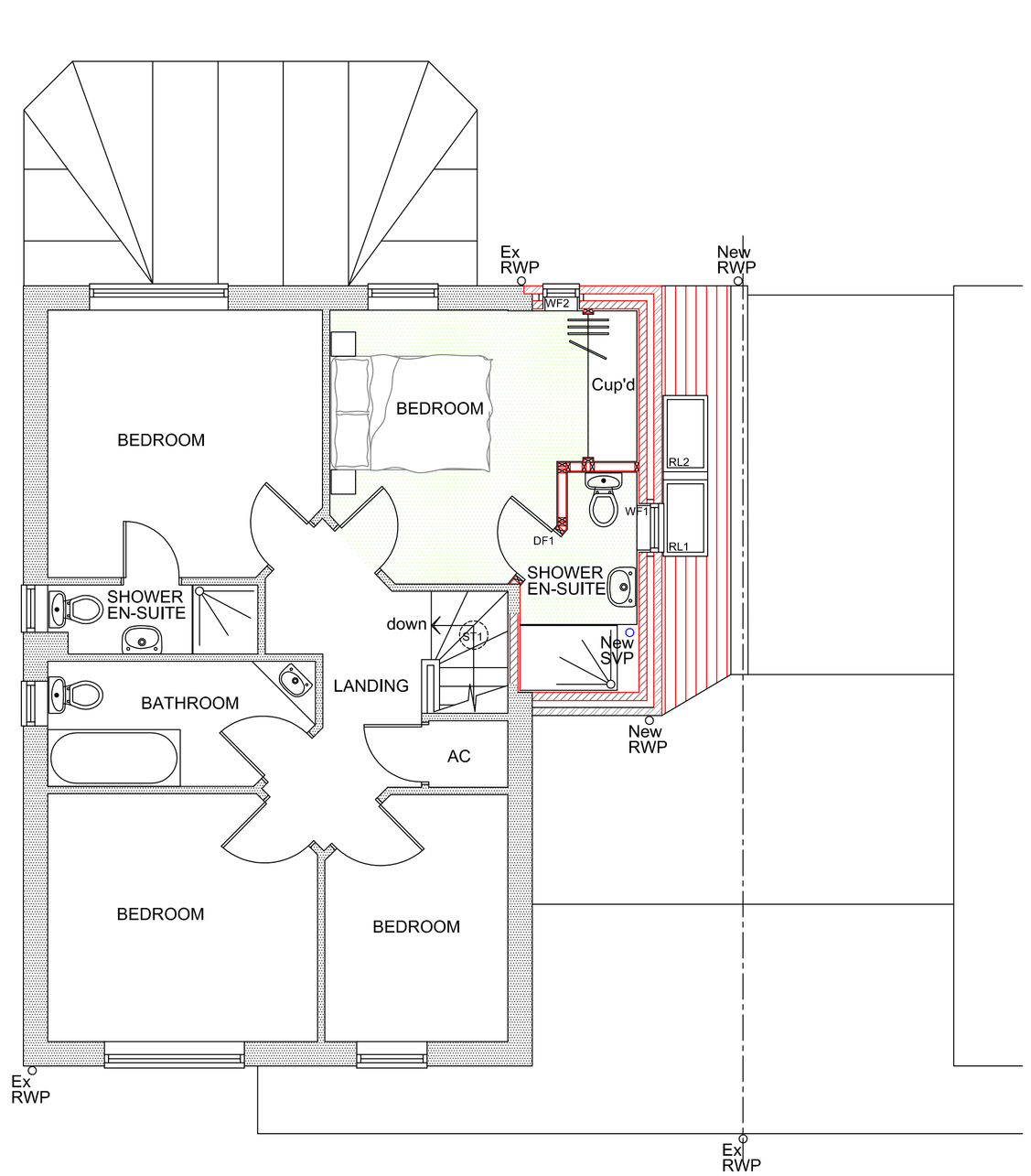

PROPOSED FIRST FLOOR PLAN

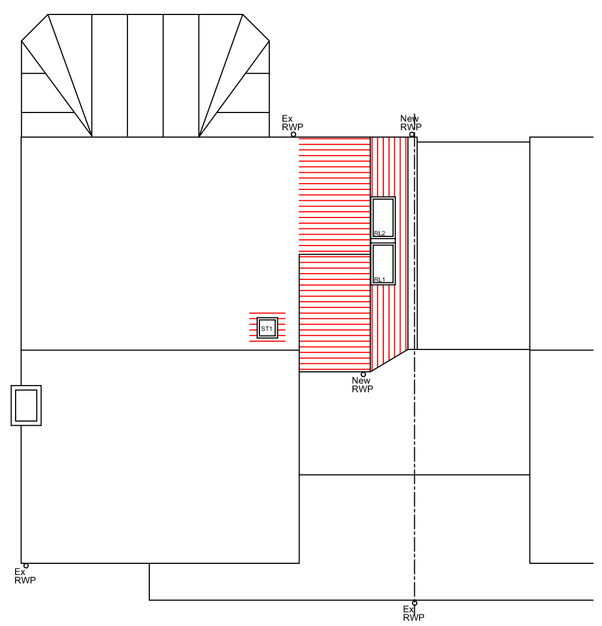

PROPOSED ROOF PLAN

Rev A 17/01/2018
-As per clients marked up drawing 16 Jan.

HOME EXTENSION TEAM
103 Bancroft, Hitchin, Herts, SG5 1NB
Tel: (01462) 440099 E-mail: hitchin@het.co.uk

Client
Mr & Mrs Box

Project
34 Sycamore Close
St Ippolyts, Hitchin
Herts
SG4 7SN

Drawing Title
Planning Application, proposed double storey rear and side infill with internal alterations. Existing plans, elevations & proposed plans

Scale A1 dwg	Date	Drawn by
1:100 1:50	17-01-2018	MD

Dwg. No.	Rev.
HET 1530/01	A