CLASSIC CASEMENT

SIDE SWING: JAMBS *Ovolo Profile on Frame and Sash*

12/09/2017 REVISION A
FILE: CL2-SW2SX

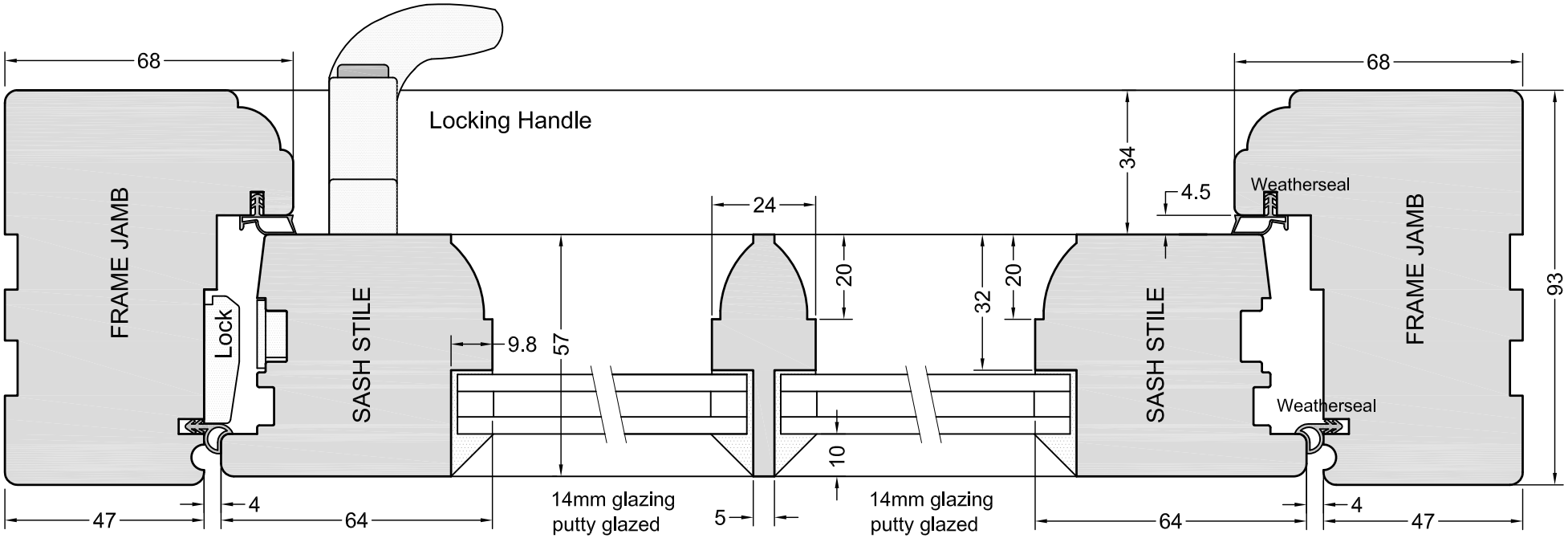

68mm JAMBS SECTION

Ovolo Profile shown, also available with Lambs Tongue

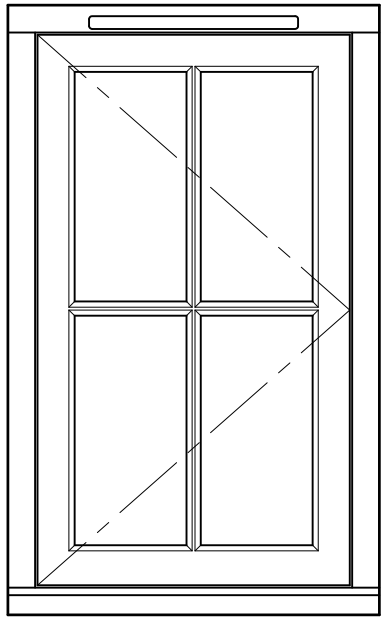

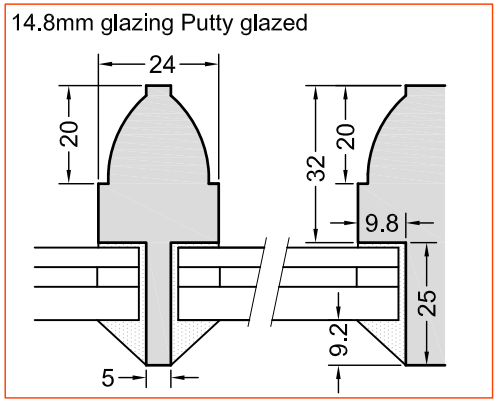

See Head/Cill section, Standard Specification Drawing, for further Frame and Sash details

DUE TO PROGRESSIVE DEVELOPMENT
MUMFORD & WOOD LIMITED RESERVE
THE RIGHT TO MODIFY OR CHANGE
SPECIFICATIONS WITHOUT PRIOR NOTICE

THIS DRAWING & SPECIFICATIONS ARE THE PROPERTY OF MUMFORD & WOOD Ltd. THEY ARE ISSUED IN STRICT CONFIDENCE AND SHALL NOT BE REPRODUCED, COPIED OR USED AS THE BASIS FOR MANUFACTURING WITHOUT WRITTEN PERMISSION.

MUMFORD & WOOD

TOWER BUSINESS PARK,
KELVEDON ROAD
TIPTREE, ESSEX
CO5 0LX
Tel: 01621 818155 FAX: 01621 818175
EMAIL: sales@mumfordwood.com
WEB: www.mumfordwood.com

ALL MEASUREMENTS ARE FINISHED DIMENSIONS IN MM. DO NOT SCALE DRAWING!