PLANNING APPLICATION

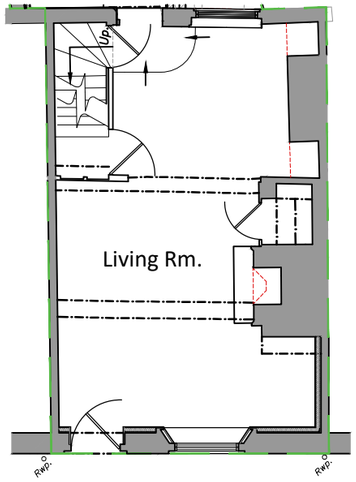

GROUND FLOOR PLAN

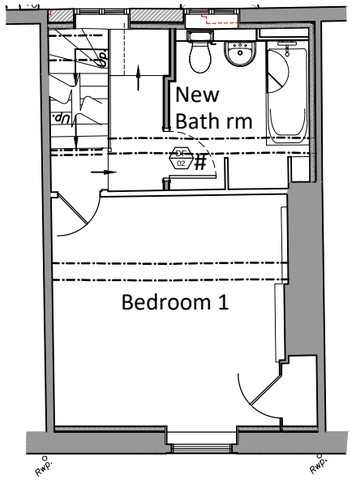

FIRST FLOOR PLAN

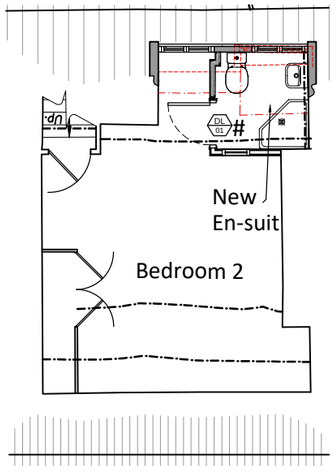

LOFT FLOOR PLAN

Scale @ 1:100

5m 4m 3m 2m 1m 0m

NEW DOORS. - #

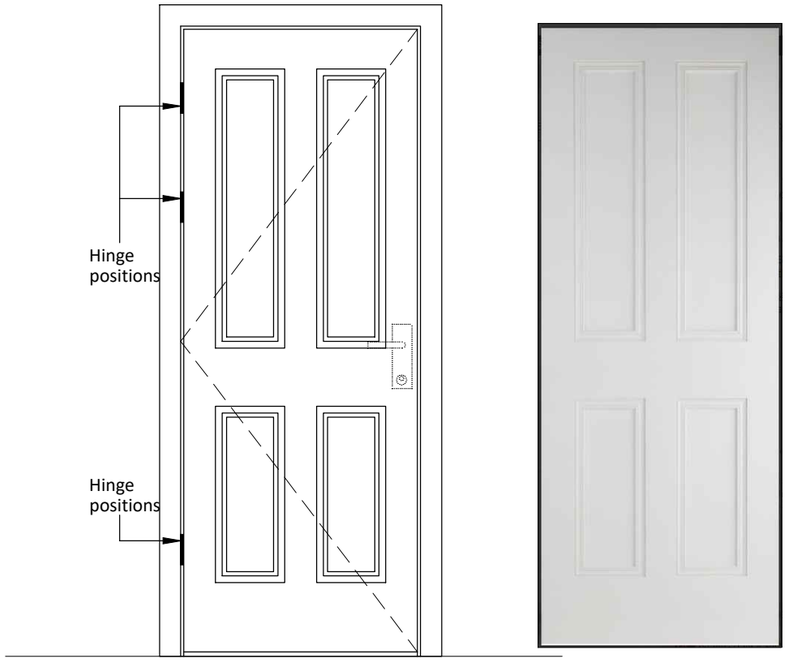

PHOTO ELEVATION

TYPE B

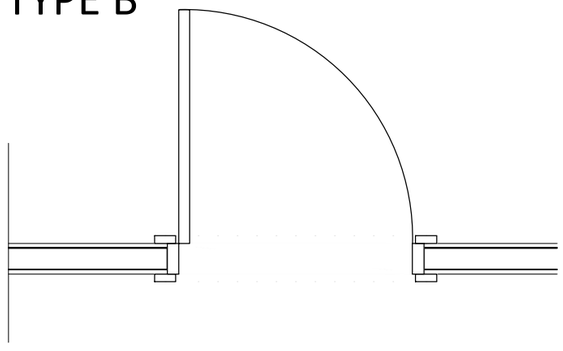

DL 01 DF 02

Scale @ 1:20

1m 0.8m 0.6m 0.4m 0.2m 0m

PROPOSED DOORS TO MATCH EXISTING
TIMBER DOOR FRAMES,
TODDS DOOR'S ' ISLINGTON 4-PANEL'
PAINTED TO MATCH EXISTING.

CURRENT PLANNING CONSENT REF : 17/00902/!HH
CONDITION 5 NEW DOORS

P:\2016\2016-66 73 Tilehouse Street, Hitchin\01 EHW Drawings\Planning\2016-66-PL.004,5,6&7 Plans As Proposed.dwg

GENERAL NOTES

© EHW Ltd

This scheme is subject to Town Planning and all other necessary consents. Dimensions, areas and levels where given are only approximate and subject to site survey. All dimensions are to be checked on site. All feasibility studies are subject to full site survey.
This drawing is to be read in conjunction with all relevant consultants and/or specialists drawings/documents and any discrepancies or variations are to be notified to the architects in writing before the affected work commences.
All queries relating to design of structural elements are to be referred to the structural engineering consultant for resolution.
The workmanship and materials of all trades and building operations shall comply with the recommendations of British Standard (BS)8000 parts 1-16 inclusive and with Approved Document to support Regulation 7 1999 edition (incorporating 2000 amendments) of the Building Regulations 2010.
All design and construction is to be in accordance with the Construction (Design and Management) Regulations 2007.

Rev	Date	Description	By

EHW Hitchin:
Keynes House, Tilehouse Street
Hitchin, Herts SG5 2DW
EHW London:
10 Margaret Street, London
W1W 8RL

T 01462 455257
E info@ehwarchitects.com
W ehwarchitects.com

ISO 9001:2008 Registered

Planning

Client

Mr P Thake

Project

Proposed Alterations
73 Tilehouse Street
Hitchin

Drawing Title

New Internal Door Details

Drawn	Date	Checked	Scale @ A3
GT	7 March 2018	-	1:20 /100
Job No	Drawing No	Revision	Note
2016-66	P.007	-	DO NOT SCALE