This drawing is copyright.

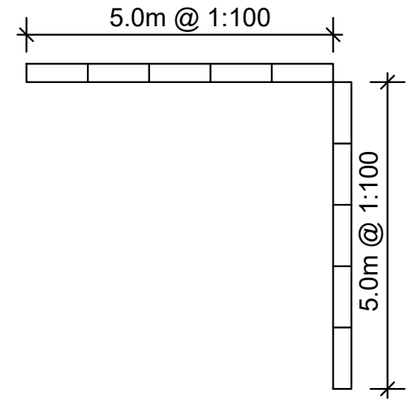

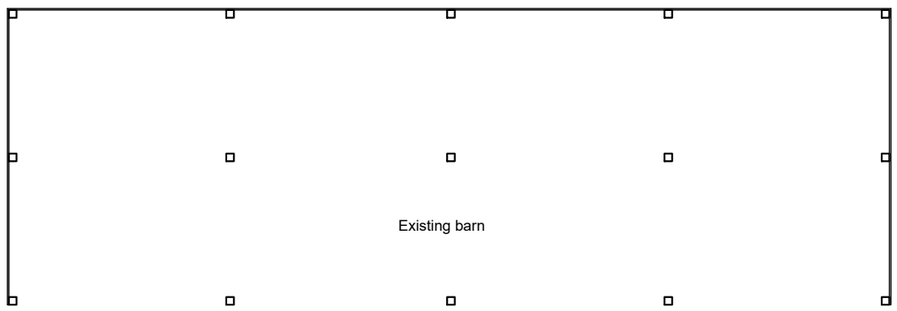

Existing Ground Floor Plan

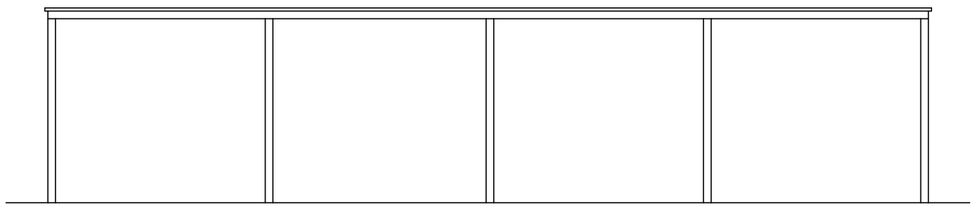

Existing front elevation

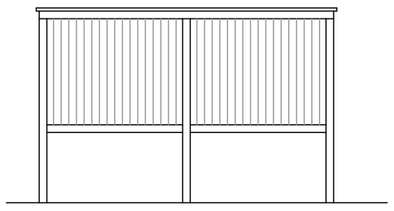

Existing side elevation

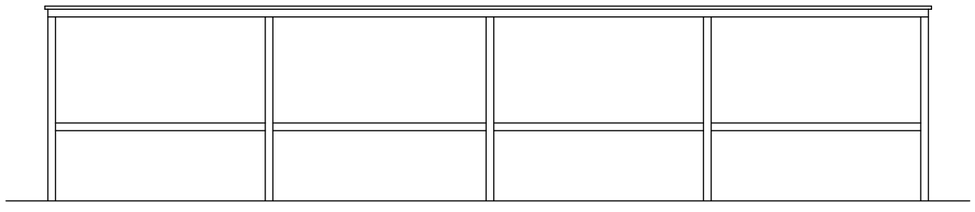

Existing rear elevation

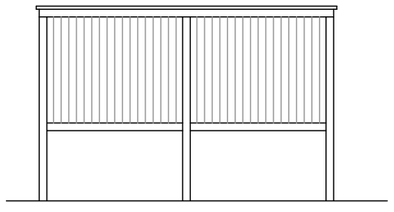

Existing side elevation

Rev.	Description.	Date.

AT Design (Welwyn) Ltd
Architectual Design Services
22 School Lane, Welwyn, Herts AL6 9PH
Tel: 07931703297 - email: adamtrigg@hotmail.com

Title;

Proposed barn conversion
Clover Top Land
Nup End, Old Knebworth
Herts. SG3 6QJ
Existing plans & elevations

Scale : 1:100 at A3
Date : March 2018
Drawn by: AT

Drg.No: AT750-03