This drawing is copyright.

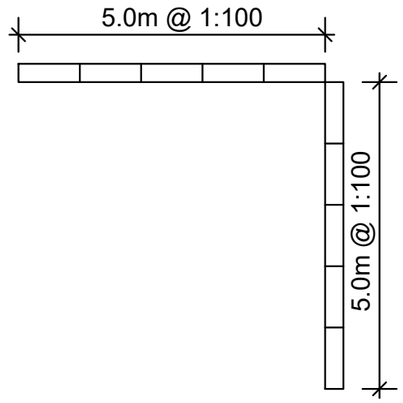

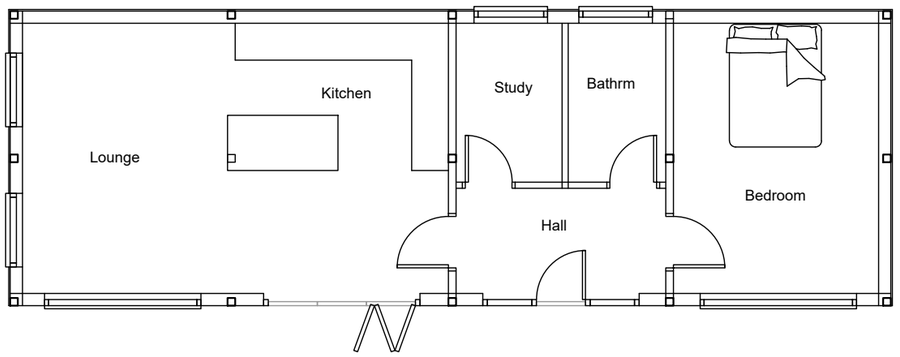

Proposed Ground Floor Plan

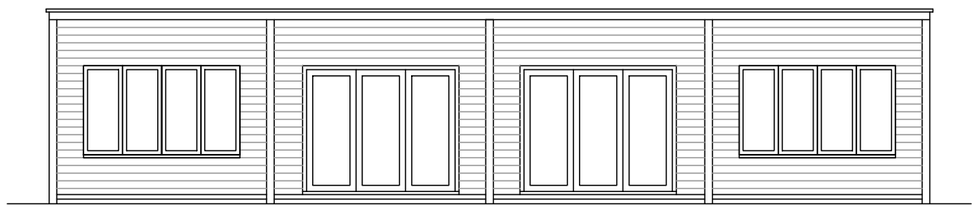

Proposed front elevation

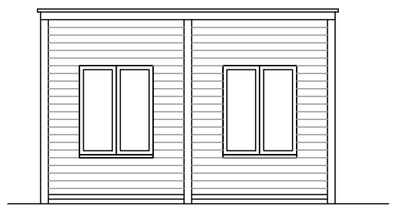

Proposed side elevation

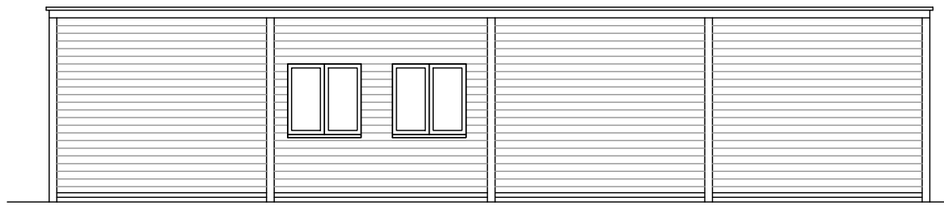

Proposed rear elevation



Proposed side elevation

Rev.	Description.	Date.

AT Design (Welwyn) Ltd
Architectual Design Services
22 School Lane, Welwyn, Herts AL6 9PH
Tel: 07931703297 - email: adamtrigg@hotmail.com

Title;

Proposed barn conversion
Clover Top Land
Nup End, Old Knebworth
Herts. SG3 6QJ
Proposed plans & elevations

Scale : 1:100 at A3
Date : March 2018
Drawn by: AT

Drg.No: AT750–04