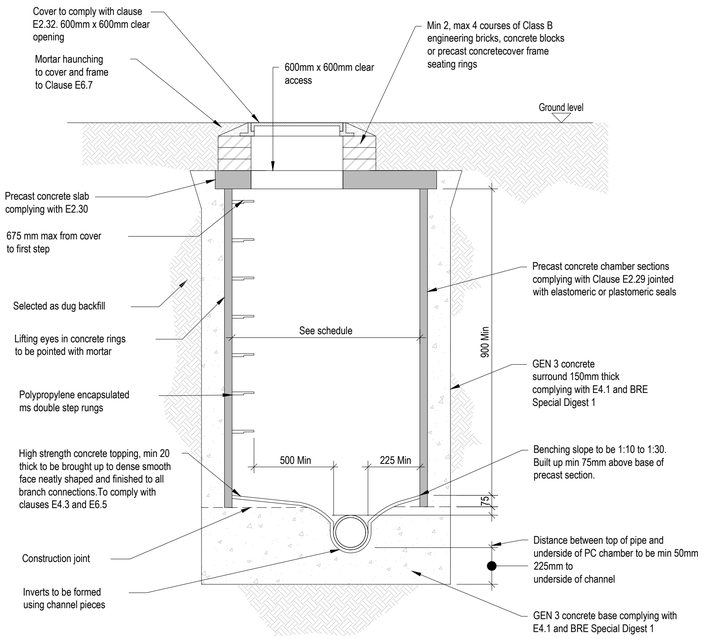

FIG B10 - TYPE B MANHOLE - SECTION

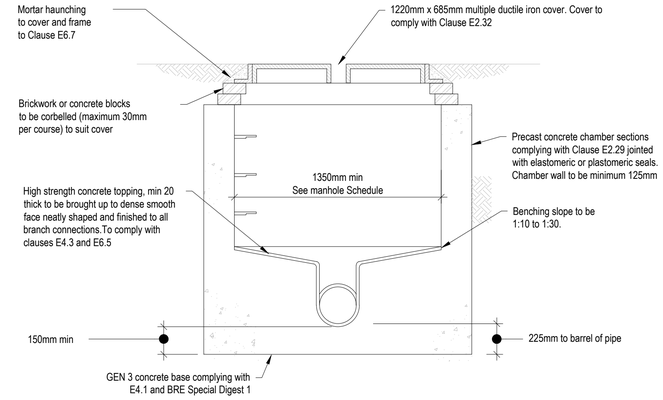

FIG B15 - TYPE C MANHOLE - SECTION

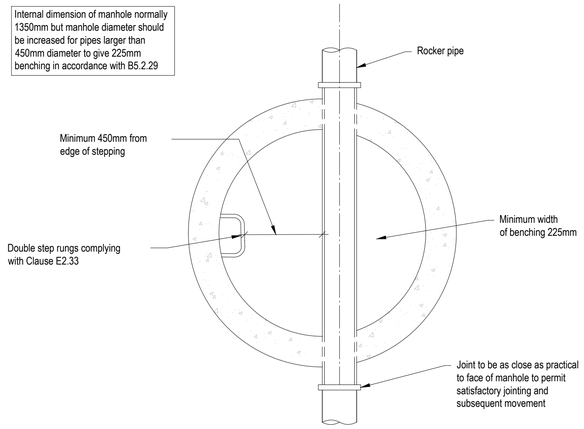

FIG B15 - TYPE C MANHOLE - PLAN

DEPTH TO SOFFIT: LESS THAN 1.5m

SEE SCHEDULE FOR DIMENSIONS AND GA FOR CONNECTIONS

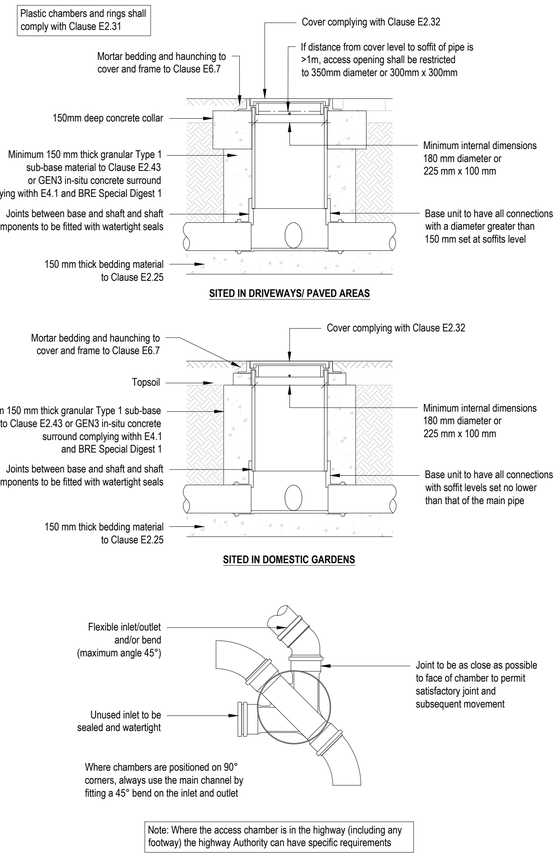

FIGURE B 23 - TYPE E - TYPICAL INSPECTION CHAMBER DETAIL

For 450 diameter chambers in :-depth from cover level to soffit of pipe up to 2m flexible material construction

Scale: 1:20

DO NOT SCALE OFF THIS DRAWING

NOTES

1. The contractor is responsible for verifying all site & setting out dimensions before commencing work.
2. This drawing is to be read in conjunction with all relevant Architectural and M&E drawings.
3. All dimensions in millimeters unless stated otherwise.

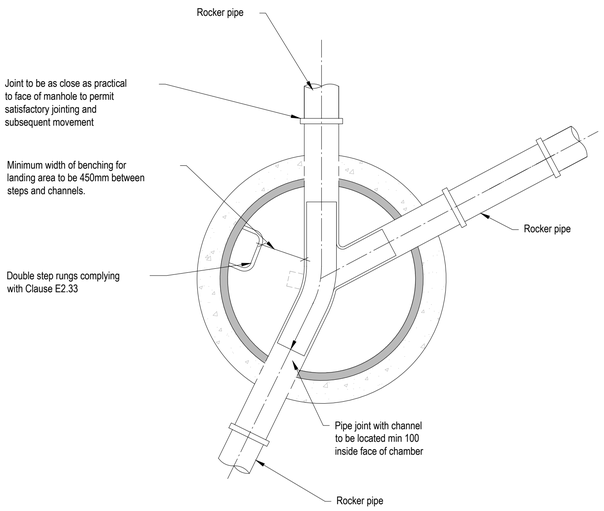

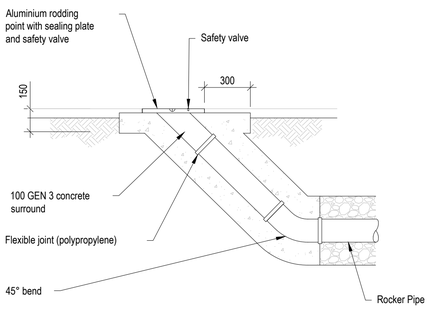

RODDING EYE

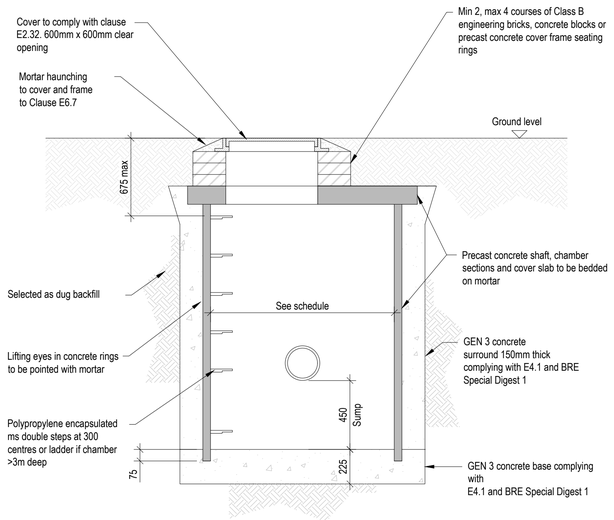

PRECAST CONCRETE CATCHPIT DETAIL

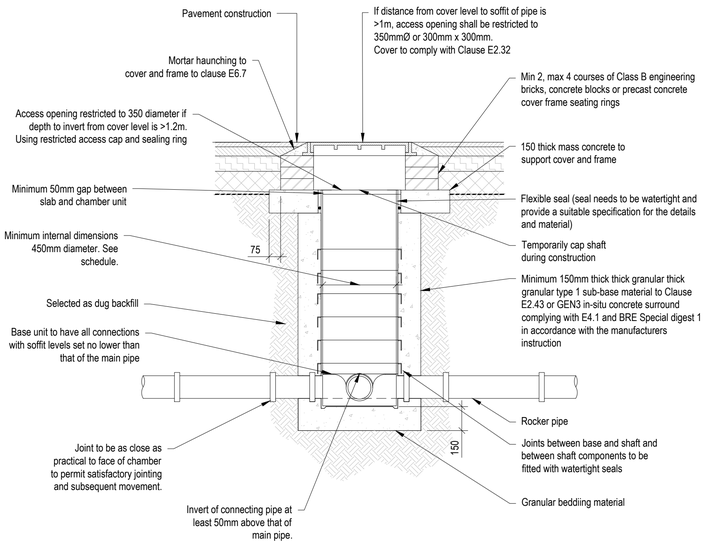

FIG B 18 - TYPE D - PLASTIC INSPECTION CHAMBER

Depth from cover to soffit of pipe up to 3m - flexible material construction for use in areas subject to vehicle loading

Scale: 1:20

Scale 1:20 @ A1 - 1:40 @ A3

400mm 0 400mm 800mm 1200mm 1600mm 2000mm

Revision History

Rev	Comment	By	Chkd	Appr	Date
A01	ISSUED FOR APPROVAL	BS	TZ	SB	03/07/2025
T01	ISSUED FOR TENDER	IK	PR	SB	30/09/2024
P01	ISSUED FOR PLANNING	SK	SB	SB	06/08/2024
Current Revision					
T01	ISSUED FOR TENDER	BS	SB	SB	15/10/2025

TENDER

REDROW HOMES LIMITED

Robert West
1 Paris Garden
London
SE1 8ND
t: 0203 773 7880
www.robertwest.co.uk

Project

LAND ADJACENT TO ROYSTON ROAD, BARKWAY

Drawing Title

PROPOSED DRAINAGE DETAILS SHEET 1

RWCL Internal Register reference: 4929 - 002

Scales @ A1

5051 - T01

© Robert West Consulting 2019. All rights reserved