Mill House Window Workshop

BENDISH FARM • BENDISH• HITCHIN • HERTS • SG4 8JD
EMAIL: OLIVER.KELLY@MHTL.CO.UK • PHONE: 01438 871 753

10 November 2017

Paul Cleworth
Green Farm
Bendish
SG4 8JD

Dear Paul,

Many thanks for the enquiry regarding your windows. Mill House Window Workshop will be able to renovate, draught proof and double glaze your existing windows so that they work smoothly and reduce draughts and noise, or we can make new replacement windows.

We aim to sympathetically conserve windows so that they look as good, and work as they would have originally. Where this is not feasible we will replace windows with appropriate ones which match the originals. In this we work closely with the local conservation departments and have specialised knowledge of the listing and conservation issues of restoration or replacement.

Please find attached a summary estimate. A full explanation of our renovation, draught proofing, repair, glazing, and new window services is attached along with a full breakdown of costs for each window. We are happy to undertake the work in stages, or to provide costs for different options.

New double glazed sash inserts come undercoated, with some bare timber where planed in, renovated windows will require decoration after restoration which is not included in the estimate. We do apply a clear preservative primer to any external bare wood, which provides temporary protection. We are also happy to supply details of decorators who we work with frequently.

Please also find attached a selection of catches and locks which may be fitted.

Please do not hesitate to call if you require any further information or wish to discuss this estimate. We are also happy to provide references should you so require them.

We look forward to hearing from you.

Yours sincerely,



Oliver Kelly

FENSA Registered Company

Mill House Trading Limited trading as Mill House Window Workshop
Company Registration: 4350504 - VAT Reg: 804 1639 50
Cleworth - Bendish.docm

Guarantee Protection through the roof

Our craftsmen make all our windows to order to ensure we match the new windows to the originals as closely as possible. We use the best quality materials to ensure our windows have the best durability, finish and reliability and security. All our work conforms to building regulations and FENSA requirements and all double glazed units conform to the quality standard EN1279.

We are FENSA registered which allows us to certify that our new windows and doors meet the many building regulation requirements, rather than having the additional cost and complication of involving planning departments and building control. We are regularly inspected to ensure that we meet the required standard.

One of the key differences with our windows is the heritage slimline double glazed units we use. These utilise a warm edge spacer technology that allows a slim rebate of only 8mm compared to standard double glazed units that require 20mm. This ensures that our glazing bars are solid through glazing bars with separate units for each pane with no stuck on bars. These units are only 12 or 14mm thick compared to standard units of 25mm thick but still achieve the required U values for building regulations. This makes your windows appear far more traditional with "puttied" sightlines.

We also use the best and clearest possible low-e glass in our heritage double glazed units. More information can be found at http://www.planitherm.com/what-is-energy-efficient-glass.

We use the best quality timber such as Iroko for the solid hardwood sills and Pitch Pine, Larch, Accoya for the sashes and frames. We can also make all of the window in hardwood or Accoya if required. We use Iroko as this is classified as very durable unlike most hardwood joinery which is only classified as moderately durable.

All our windows are very discretely draught proofed, using a low friction polypropylene covered foam which is far superior to brush based draughtproofing systems which clog with paint and dirt.

New joinery (complete windows and doors) is supplied fully painted with a 5 coat process including preservative, undercoats, and topcoats in semi-gloss sheen. Sash inserts come undercoated as standard, but we can finish them to topcoat too.

We use premium solid furniture in a variety of finishes to match as closely as possible the original look of your windows. We have a wide selection of furniture that can be chosen from.

We are very proud of our independent customer reviews which you can see at:
https://uk.trustpilot.com/review/www.sashwindowrepair.co.uk

Payment Terms
Draughtproofing: A booking deposit of £100, and the balance on completion.

Double Glazing/Inserts: We ask for 50% of the double glazing cost, and the balance on completion.

New Joinery: We ask for a 10% deposit with order plus the cost of any planning application. 40% on start of manufacture, 40% before installation, and 10% after installation. Deposits are protected by an insurance backed deposit protection scheme through the GGF.

Full terms and conditions available on request.

Mill House Window Workshop

BENDISH FARM•BENDISH•HITCHIN• HERTS•SG4 8JD

PHONE: 01438 871 753 • FAX: 01438 871977

EMAIL: OLIVER.KELLY@SASHWINDOWREPAIR.CO.UK

Window Restoration Draughtproofing and Re-Weighting

Restoration of your timber sash windows will ensure all windows are structurally sound, work freely and have cords of the correct length, and with the correct weights. The restoration process includes:

- Both upper and lower sashes are removed and checked for any loose joints which will be glued and clamped and any minor damage repaired with Windowcare repaircare epoxy resin repair system.
- Any excess build up of paint is removed from the frame to ensure the windows move freely. This is accomplished by scraping and sanding the pulley lining.
- Pulleys are lubricated to ensure they move freely and do not make any noise.
- Each sliding sash is scraped and sanded around the perimeter to remove build up of paint to a smooth finish. The glazing bar mouldings are not sanded.
- Any loose tenon joints are strengthened using construction joint repairs.
- Any cracked, defective or loose putty is removed and replaced. (It is best to do this before decoration starts as putty needs to harden for 2 weeks before painting). Putty that is solid is left in place. We do not remove excess paint from the glass where it has been over painted.
- The window will be completely re-corded with waxed cotton sash cord of the appropriate size.
- Any broken or missing staff/parting beads are replaced with new primed timber staff and parting beads.
- The draught-proofing consists of a perimeter sealing system and is machined into lower sash meeting rail, staff beads and parting beads.
- Finally both sashes will be checked to ensure free travel. The top sash needs to travel below the bottom sash bottom rail to allow access for painting.
- Staff beads will be adjusted to ensure a snug fit allowing for painting.
- The sashes are also adjusted so the meeting rails are level if new catches are being fitted.
- The windows are checked for weight to ensure they do not drift shut, or drift open. (There is an additional charge for any lead used as make-weights.)
- Finally, we coat any external bare timber with a **clear** primer preservative that contains a fungicide and insecticide.

Draught proofing will ensure that your windows are improved by:

- Eliminating rattles
- Reducing the draughts to a minimum.
- Reducing noise from outside by up to 10dB (A bigger difference than by double glazing)
- Reducing the dust and dirt that comes in through gaps

As an independent company, we are free to choose from a range of insulation products from several manufacturers, selecting the seals most suitable for each situation .The seals we use are virtually invisible when the window is closed. Yet the difference they can make to heat loss is enormous. All windows require a gap between the sashes and the frame, to give room for opening and closing. Just half a centimetre of gap around the edges of a typical sash window adds up to 300 square centimetres; equivalent to a seven inch square hole. **We do not use brush seals as these inevitably clog with paint and discolour very quickly and become ineffective.** We use a proprietary polypropylene covered foam seal.

Where possible we use traditional materials such as lime mortars, and prefer to renovate or repair rather than replace.

Please note that preparation for painting is not included in the cost and more preparation work will be required. However the restoration goes some way towards this with the removal of excess paint and sanding.

Double Glazing

We are able to supply double glazed units that will fit into the existing rebates of most traditional sash and casement windows. These utilise a warm edge spacer technology that allows a slim rebate of only 9mm compared to standard double glazed units that require 20mm. This ensures that our glazing bars are solid through glazing bars with separate units for each pane with no stuck on bars. These units are only 12 or 14mm thick compared to standard units of 25mm thick but can still achieve the required U values for building regulations. This makes your windows appear far more traditional with "puttied" sightlines.

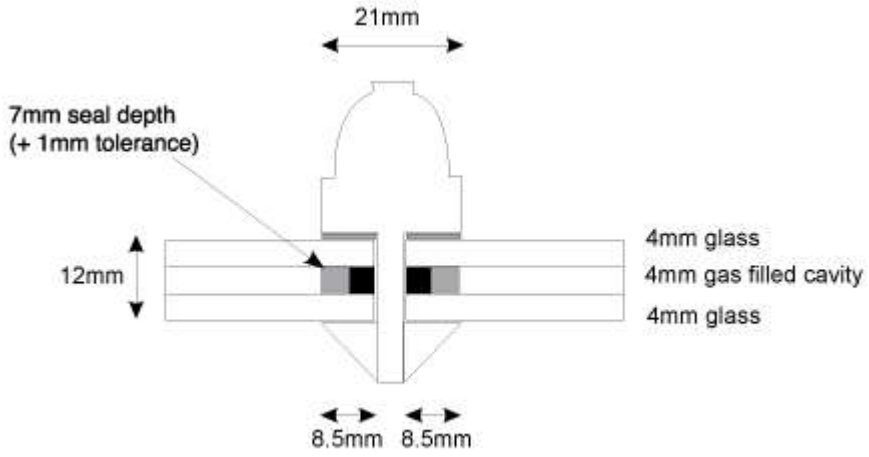

For windows that are less than 38mm thick we are able to offer new sash inserts with Slimline double glazing. These replace your existing sliding sashes. The sashes have a traditional moulding that will closely match your original windows, and we are also able to match the decorative horns on your original sashes. Sash inserts come undercoated, or optionally fully painted.

Our double glazing uses individual units for each pane. **We do not use stick on bars.**

Glass and Noise Reducing glazing

At the same time as restoration we can also glaze any cracked and broken panes using appropriate glass.

In addition to standard glass, we are able to offer restoration glass for any glazing that is required. This has a pleasing gentle wave in all directions and gives the effect of hand-blown Cylinder glass, although it does not have the small imperfections such as seeds (small air bubbles) or ream (fold-like marks) found in very old window glass. We can also offer hand-blown glass to match glass in pre Victorian properties. We can also replace existing glass with acoustic glass of either 6.4mm or 8mm thickness.

New Windows and Doors

Whether you require new windows, or where unsuitable replacement windows have been installed, or in the very rare cases that a window is beyond economic repair we can provide new sash windows to match the originals. Painstaking attention to detail results in a reproduction window that performs as well as or better than the original.

Our craftsmen make all our windows to order to ensure we match the new windows to the originals as closely as possible. We use the best quality materials to ensure our windows have the best durability, finish and reliability and security. All our work conforms to building regulations and FENSA requirements and all double glazed units conform to the quality standard EN1279.

Our windows are very different to the "off the shelf" modern windows that usually look inappropriate. Our special double glazing units (see double glazing below) also allow us to use thin glazing bars to match the original profiles used in Georgian and Victorian windows without using stick on bars.

Windows can be supplied, single or double glazed, with traditional weights and pulleys, and in a selection of high quality timber. All windows are made to order and to your exact specification. We do not have a "standard" window design or profile that we mass produce. A typical specification includes:

Iroko hardwood sills, with Douglas fir or Pitch Pine sashes and frames. Double glazed with 23mm glazing bars providing two to eight panes per sash. Slimline heritage double glazed units will be "puttied" in with dryglaze compound and require only a 9mm rebate hence the fine glazing bars. Windows will be discretely draught proofed with a non brush system. Windows can be fully finished in white with a four part paint system, preservative primer, undercoat and gloss topcoat. Price includes solid brass furniture locks, lifts, and solid brass pulleys.

Repairs

It is almost always more cost effective and less disruptive to repair existing windows than to replace them. We are able to replace all the different components of a sash and other windows. Sills, bottom rails, inner and outer linings, pulley stiles, pulleys, bottom rails. The most common repairs required are to the sill and to the bottom rail of the lower sash. These are easily repairable. Repairs using our methods will last as long as the original windows, and certainly far longer than simple use of filler.

When repairing we cut out rotten timber and splice in new timber. We only use slow grown well seasoned timber that will match the original timber found in your windows. For sill repairs we use Iroko (very durable), but are happy to use oak (moderately durable). If necessary, we can make up new sashes to match the originals, carefully copying such details as the glazing bar mouldings, or the decorative horns (or joggles) below the meeting rail.

Where the affected timber, usually rotten sills, has allowed water ingress to the inside walls, the plaster may be "blown" and some plaster in rare cases may come away as part of the repair process. Usually this can be easily patch repaired by a plasterer. Please note that this making good is outside the scope of the timber repairs being carried out. Pointing around windows is also not included unless detailed in the schedule of work.

Window furniture, Catches and security locks

We would be happy to supply and install a range of catches, stays, lifts, security and ventilation locks. We offer a variety of finishes. Please see our sheet with a small selection of what we can offer.

Sash windows work best when both the top and bottom sash are open a little to create good airflow. If any of the top sashes are difficult to open due to their size. I would recommend installing solid cast brass D sash pulls that will enable the top sash to be used more easily, and also prevent damage to the sash by pushing on the top rail to close it.

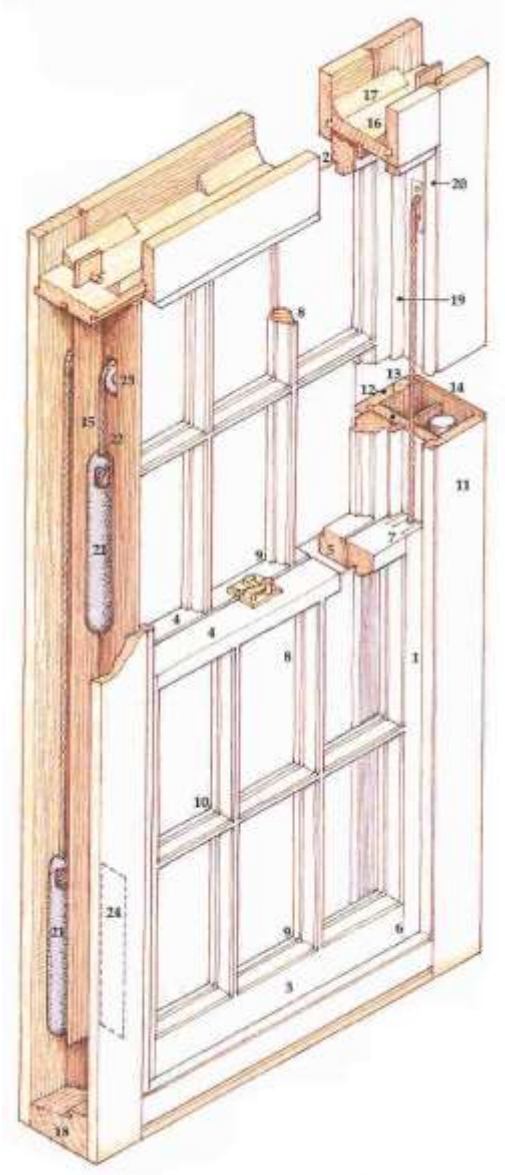

Components of a Sash Window

1. **Stile**
2. **Top Rail**
3. **Bottom Rail**
4. **Meeting rail**
5. **Upper sash meeting rail**
6. **Through Mortice and Tenon**
7. **Meeting Rail Tenon joint**
8. **Glazing Bar**
9. **Glazing Bar Mortice and Tenon**
10. **Glazing bar joints**
11. **Inner Lining**
12. **Outer Lining**
13. **Pulley Lining/Stile**
14. **Back/Box Lining**
15. **Parting Slip/Wagtail**
16. **Soffit Lining/Pulley Header**
17. **Joint Block**
18. **Sill**
19. **Parting Bead**
20. **Staff/Stop Bead**
21. **Weight**
22. **Sash Cord**
23. **Pulley wheel**
24. **Pocket**