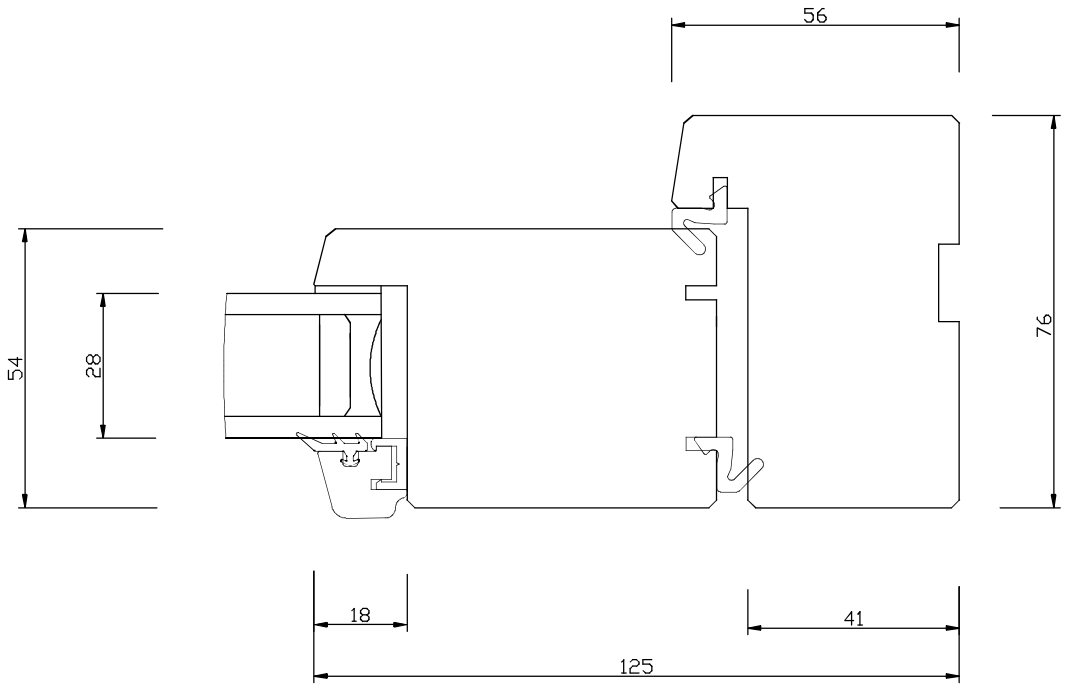

JELD—WEN
FARNDALE DOORS
JAMB SECTION
OPEN OUT