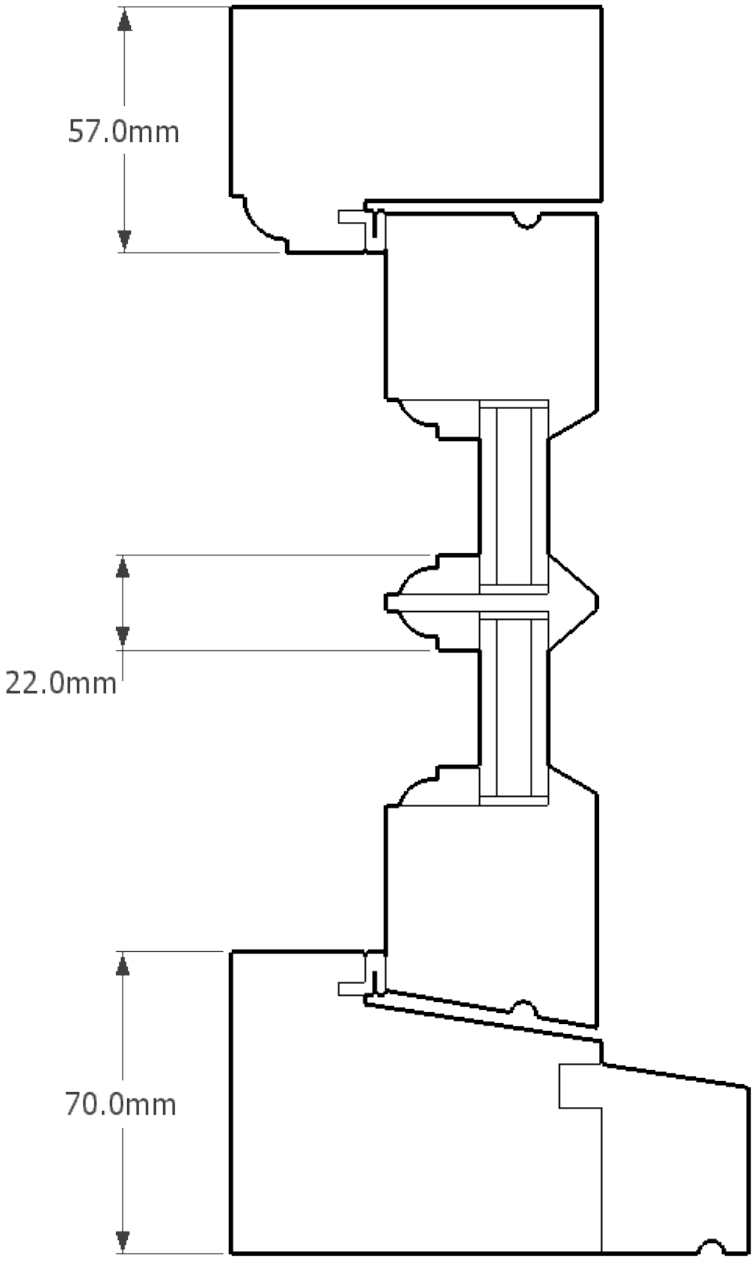

Danny Spaul

139 Wilbury Rd

Letchworth GC

SG6 4JG

Proposed section featuring ‘full bars’ for individual panes for new windows