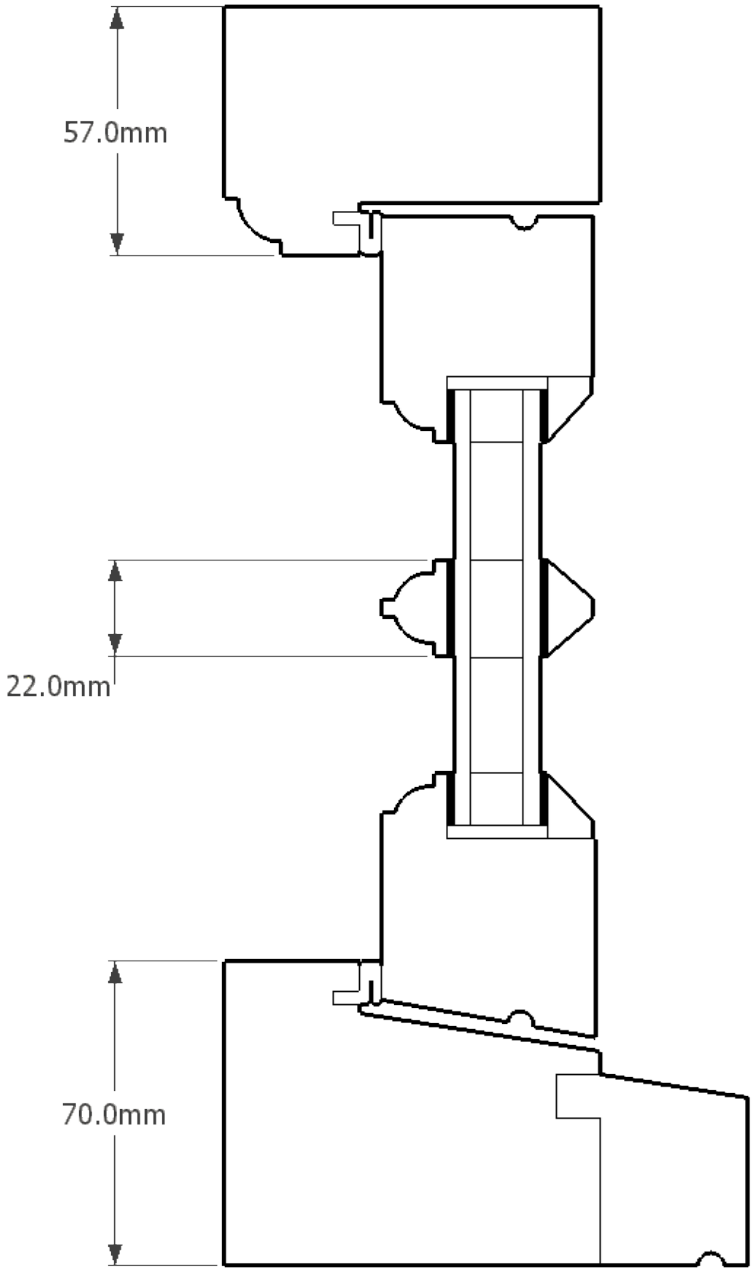

Mr Danny Spaul

139 Wilbury road

Letchworth GC

SG6 4JG

Proposed French Door section featuring ‘stuck on Georgian bars’ (Preferred Choice Option)