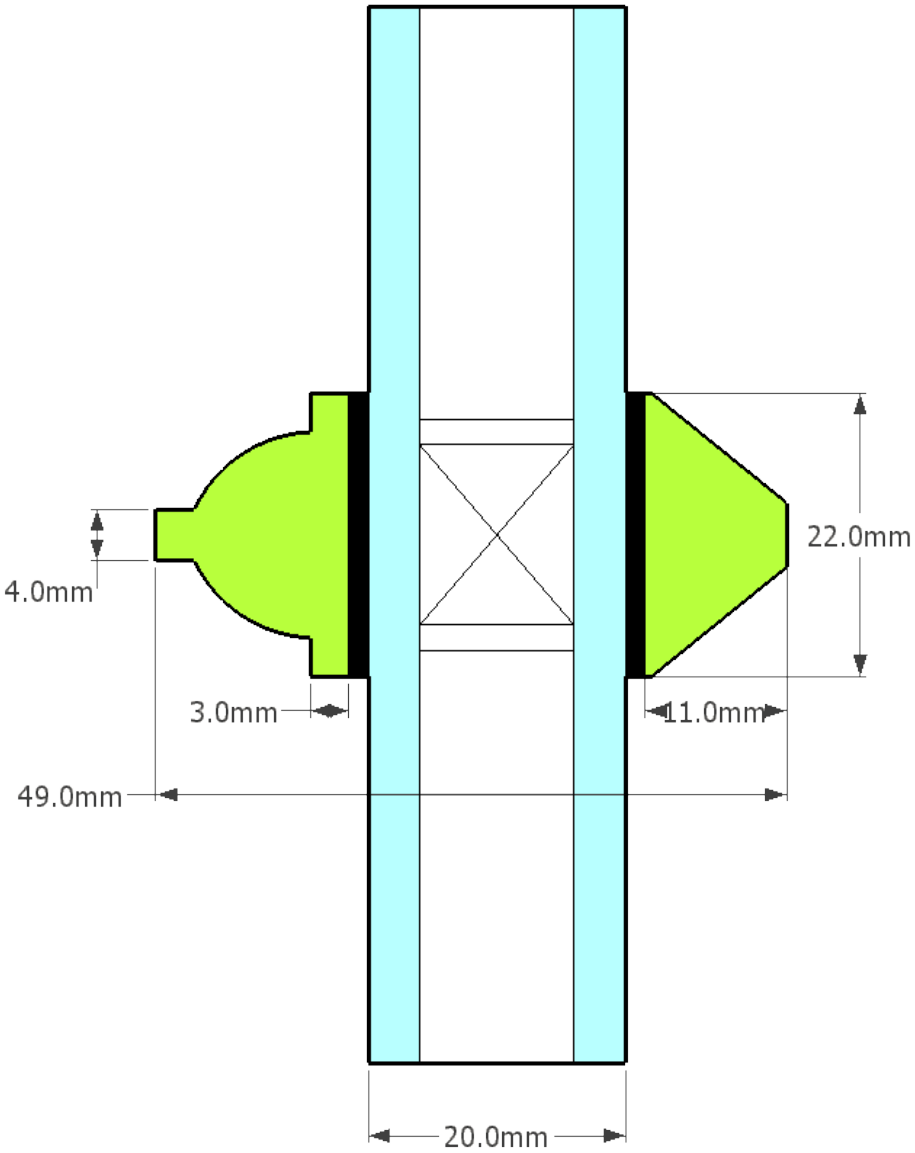

SCALE 1:1

'STUCK ON' GLAZING BARS

ALLOWING 20MM STANDARD DOUBLE GLAZING FOR NEW FRENCH DOORS

REF- 139 WILBURY RD, LETCHWORTH