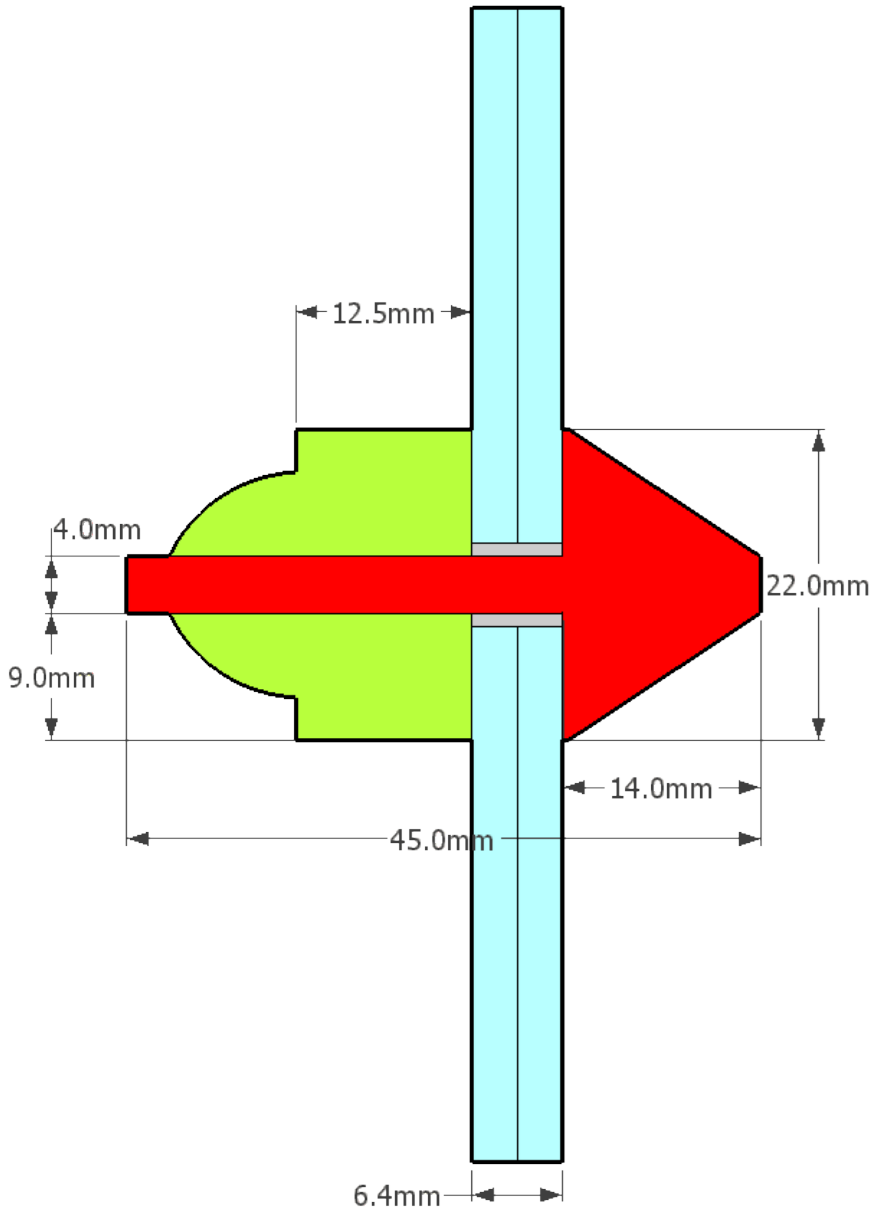

SCALE 1:1

GLAZING BAR SECTION

ALLOWING 6.4MM LAMINATED GLASS FOR NEW WINDOWS

REF – 139 WILBURY RD, LETCHWORTH