

EAST ELEVATION

REDLAND CAMBRIAN SLATE WITH MATCHING RIDGE

EAVES AND BARGEBOARDS WHITE uPVC
GUTTERS AND DOWNPIPES BLACK uPVC
CLADDING - ETERNIT CEDRAL LAP - BLUE-GREY
BLUE ENGINEERING BRICK BASE

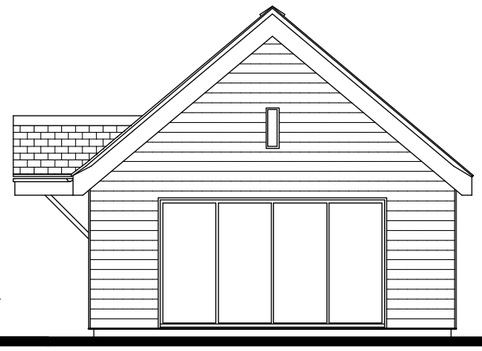

NORTH ELEVATION

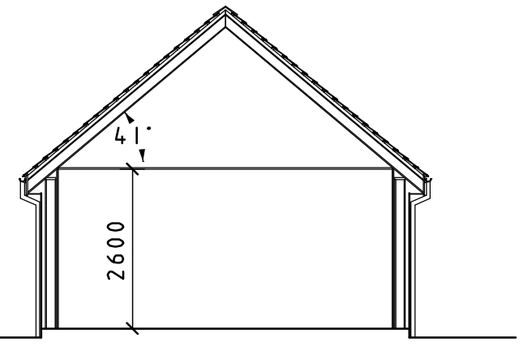

SECTION



SOUTH ELEVATION

WINDOWS - WHITE uPVC TRIPLE GLAZED

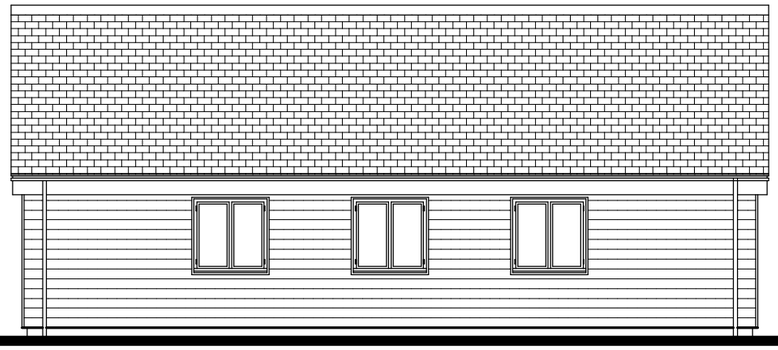

WEST ELEVATION

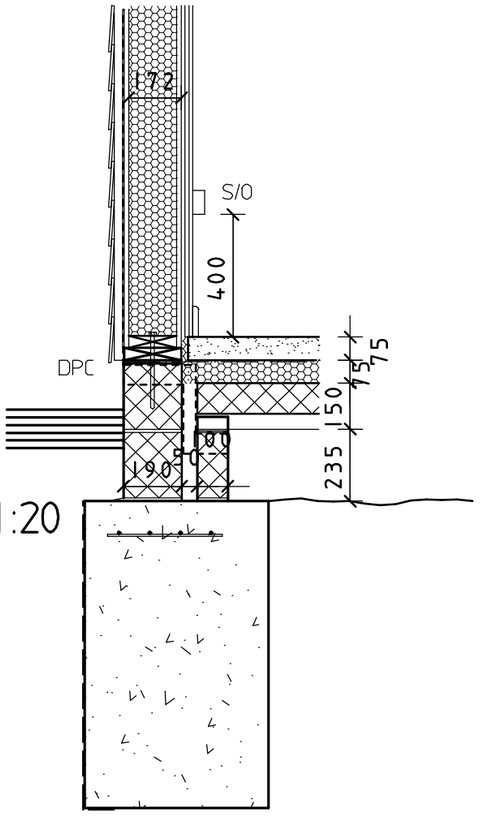

WALL SECTION 1:20

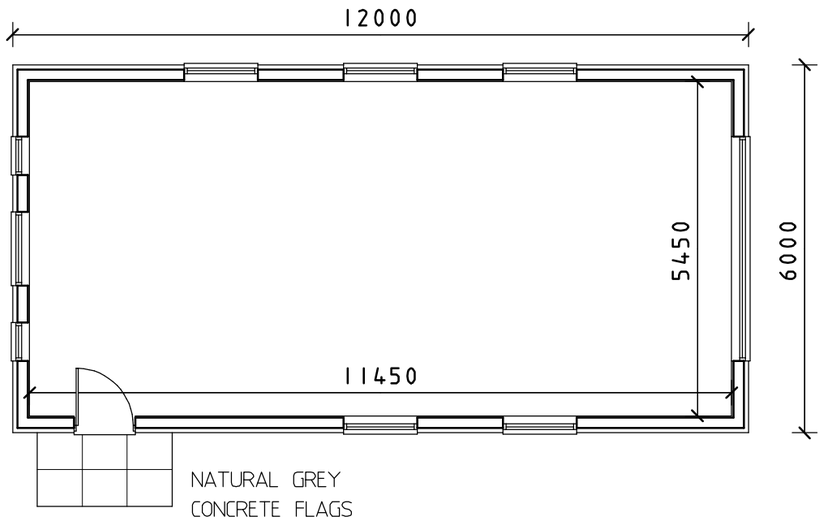

PLAN

0 1 2 3 4 5m

Revisions A. 02/03/18. BUILDING REORIENTATED

AT4 Architects Ltd
THE BARN THE WHITE HOUSE
PRESTON ROAD GOSMORE
HERTFORDSHIRE SG4 7QS
TELEPHONE
(01462) 422334/441593
EMAIL office@at4architects.co.uk WEB SITE www.at4architects.co.uk
DIRECTOR - EDMUND WRIGHT, R.I.B.A.

Project	WELLNESS CENTRE		
Client	THE JOHN CLEMENTS SPORTS & COMMUNITY TRUST		
Title	PROPOSED PLAN & ELEVATIONS		
Scale	1:100/20 @ A3	Drawn by	JEB
Date	JAN 2018	Drawing No.	18/01/01 A

DO NOT SCALE OFF THIS DRAWING
THIS DRAWING IS PROTECTED BY COPYRIGHT