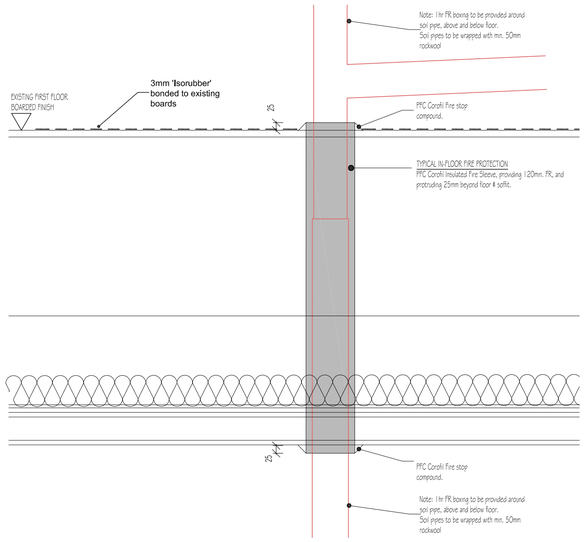

Soil Pipe Fire Protection
Straight Run thru' First Floor (Listed Building)
1:10

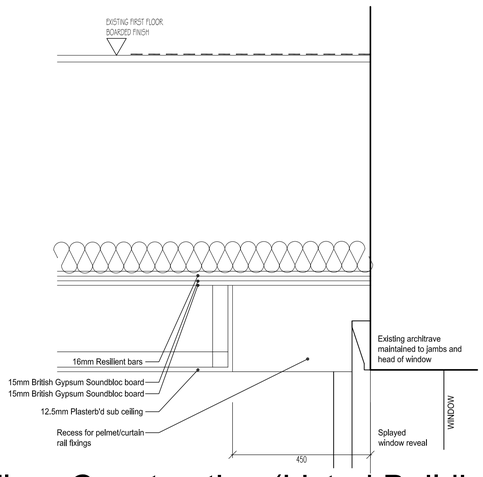

First Floor Construction (Listed Building)
1:10

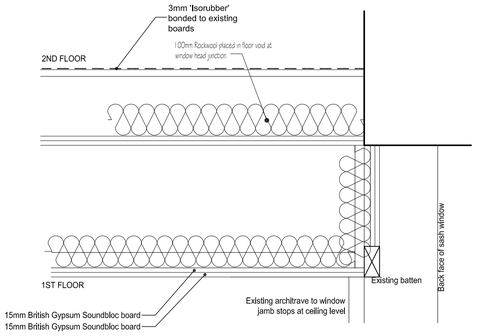

2nd Floor Construction
(Listed Building)
1:10

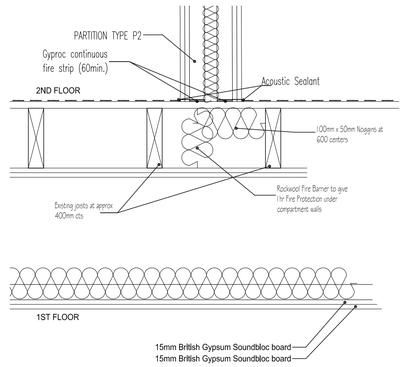

2nd Floor Construction (Listed Building)
Detail at 2nd Floor Compartment
1:10

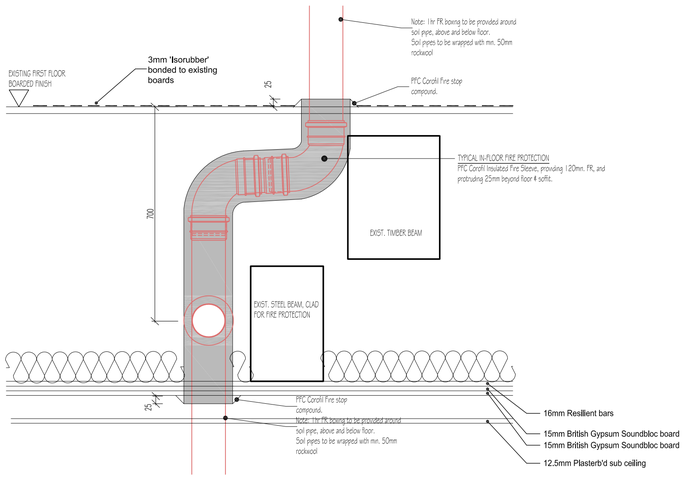

Soil Pipe Fire Protection
Off-set Run thru' First Floor (Listed Building)
1:10

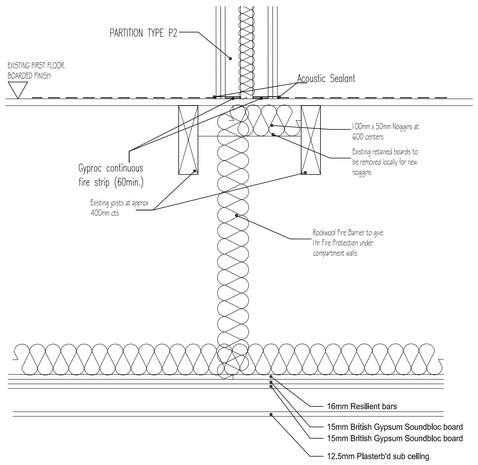

1st Floor Construction (Listed Building)
Detail at 1st Floor Compartment
1:10

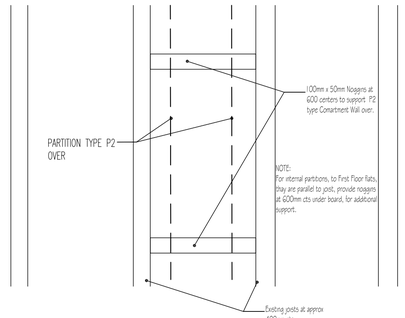

1st & 2nd Floors (Listed Building)
Part plan showing additional support for compartment walls and internal partitions
1:10

[redacted]

THIS DRAWING IS A PRINT AND MUST NOT BE SCALED. ANY QUERIES REGARDING DIMENSIONS TO BE TAKEN UP WITH PENTANGLE DESIGN GROUP.

ALL DIMENSIONS OF EXISTING BUILDINGS TO BE VERIFIED ON SITE.

THIS DRAWING IS THE COPYRIGHT OF PENTANGLE DESIGN GROUP AND SHALL NOT BE IN ANY WAY USED OR REPRODUCED WITHOUT THEIR PRIOR WRITTEN CONSENT.

NOTES

REV B: 22-11-17. Amendments following discussions with Conservation Officer.

REV. A. 24.02.17 Status changed to 'Construction'

CONSTRUCTION

PENTANGLE
DESIGN GROUP
SUITE 1, 21 BANCROFT HITCHIN HERTS SG5 1JW
TEL:(01462) 431133 E:PDG@PENTANGLEDESIGN.CO.UK

JOB TITLE
PROPOSED CONVERSION OF OFFICE ACCOMMODATION TO RESIDENTIAL,
LATCHMORE COURT,
HITCHIN, HERTS

DRAWING TITLE
BLOCK B DETAILS

SCALE	DRAWING NUMBER	REVISION
1:20 @A1	25	B
DATE: Sept '16		
SERIAL No.		
JOB NUMBER: 3293		

ARCHITECTS & INTERIOR DESIGNERS

[redacted]