THIS COMPONENT OR ASSEMBLY MUST BE COMPLIANT WITH RoHs REGULATIONS

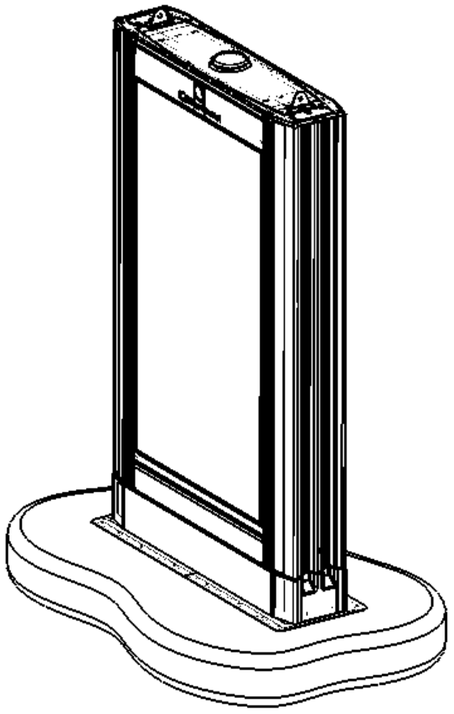

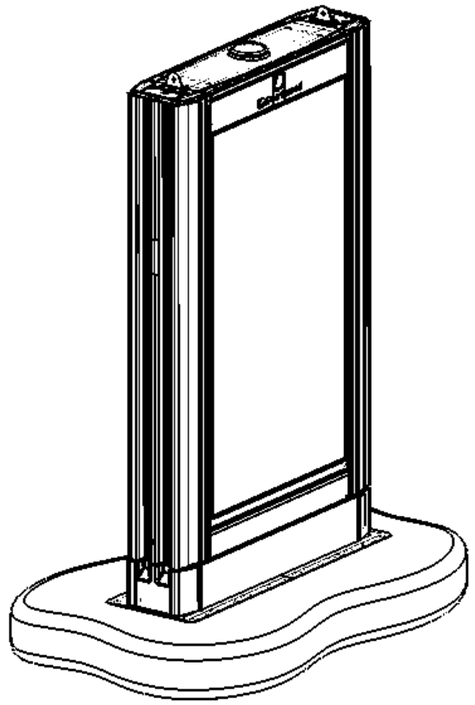

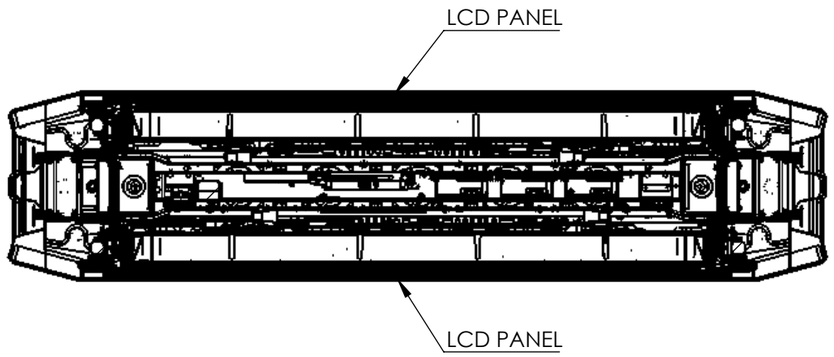

SECTION F -F
SCALE 1 : 10

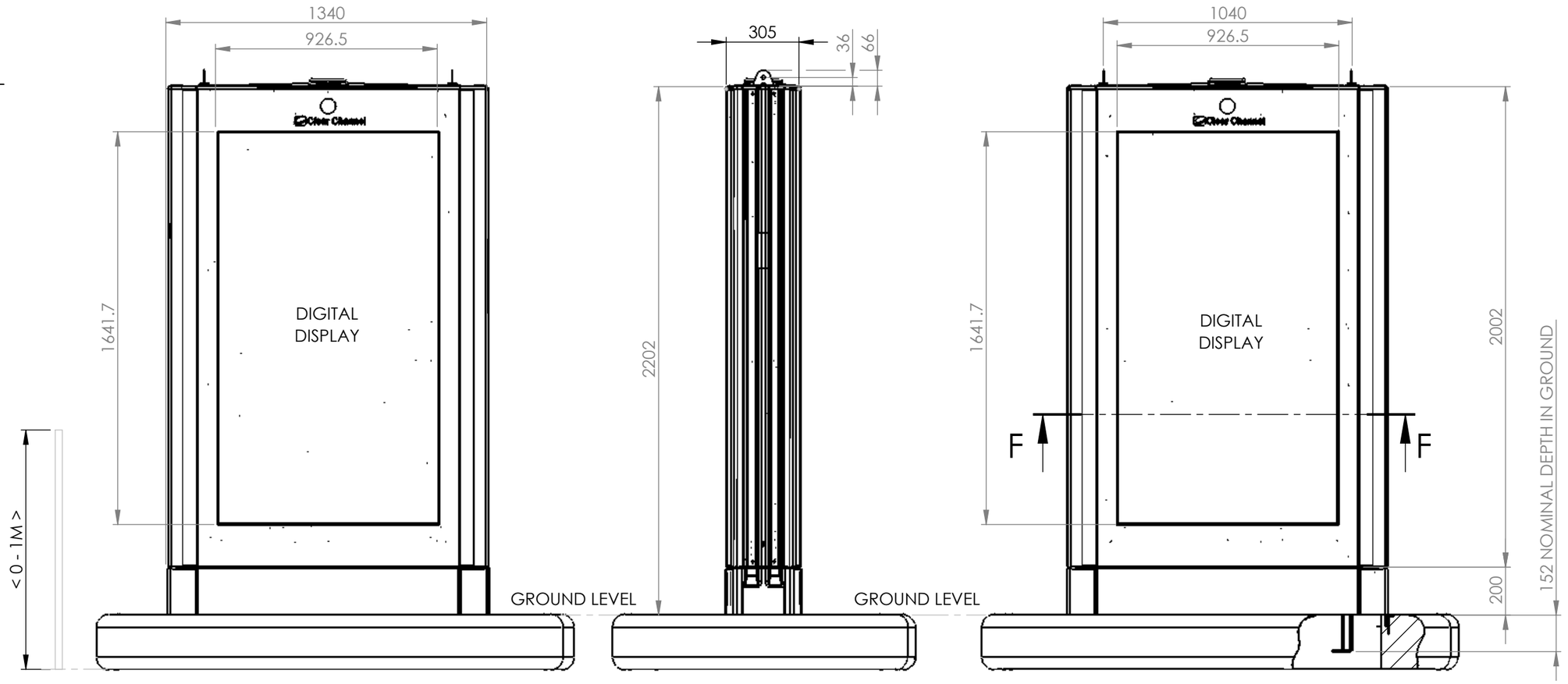

PROJECTION

DRAWING CONFORMS TO: BS 8888:2006
ALL DIMENSIONS IN mm
IF IN DOUBT, ASK!

© COPYRIGHT AMSCREEN Ltd
This document is the Copyright of AMSCREEN Ltd and may not be reproduced in whole or in part, nor passed to any organisation or person without the specific prior written permission of AMSCREEN Ltd.

REV:	CHANGES/ECR:	DRW / DATE:
C	EC00573	GAtkinson 06/12/2017
B	EC00573	GAtkinson 01/12/2017
A	Engineering Release	SD 06/11/2017

MASS (g): N/A

APPROVAL		
	DRW: S DRIVER	06/11/2017
	CHK: J WHITEFORD	08/12/2017
	APR: G GREENWOOD	08/12/2017

CLEANING CATEGORY:
INSPECTION CATEGORY:

MATERIAL + SPEC:
SEE DETAILS

FINISH:
SEE DETAILS

PROCESS:
ASSEMBLE

TREATMENT:
N/A

TOLERANCES (UNLESS SPEC.)		
	LINEAR:	UP TO 20 ±0.1 20 < 100 ±0.2 OVER 100 ±0.4
	ANGULAR:	±0.5°
	HOLE CENTRES:	⌖ 0.1
	TOOLING RADII 0.5 MAX	
	SURFACE TEXTURE:	▽
	DEBURR AND BREAK SHARP EDGES	

AMScreen
media made to measure
Amscreen House, Paragon Business Park,
Chorley New Rd, Horwich, Bolton, BL6 6HG
www.amscreen.eu
Tel: 01204 664333 Fax:

EXTERNAL REF:
-

TITLE:
DS75 D6+D6 PLANNING DRAWING BUS SHELTER

DWG NUMBER:	REVISION:
204173	C

SIZE:	SCALE:	SHEET:
A3	1:20	1 / 1