CLASSIC CASEMENT

SIDE SWING SYSTEM

Ovolo Profile on Frame and Sash

12/09/2017 REVISION A

FILE: CL2-SW1SX

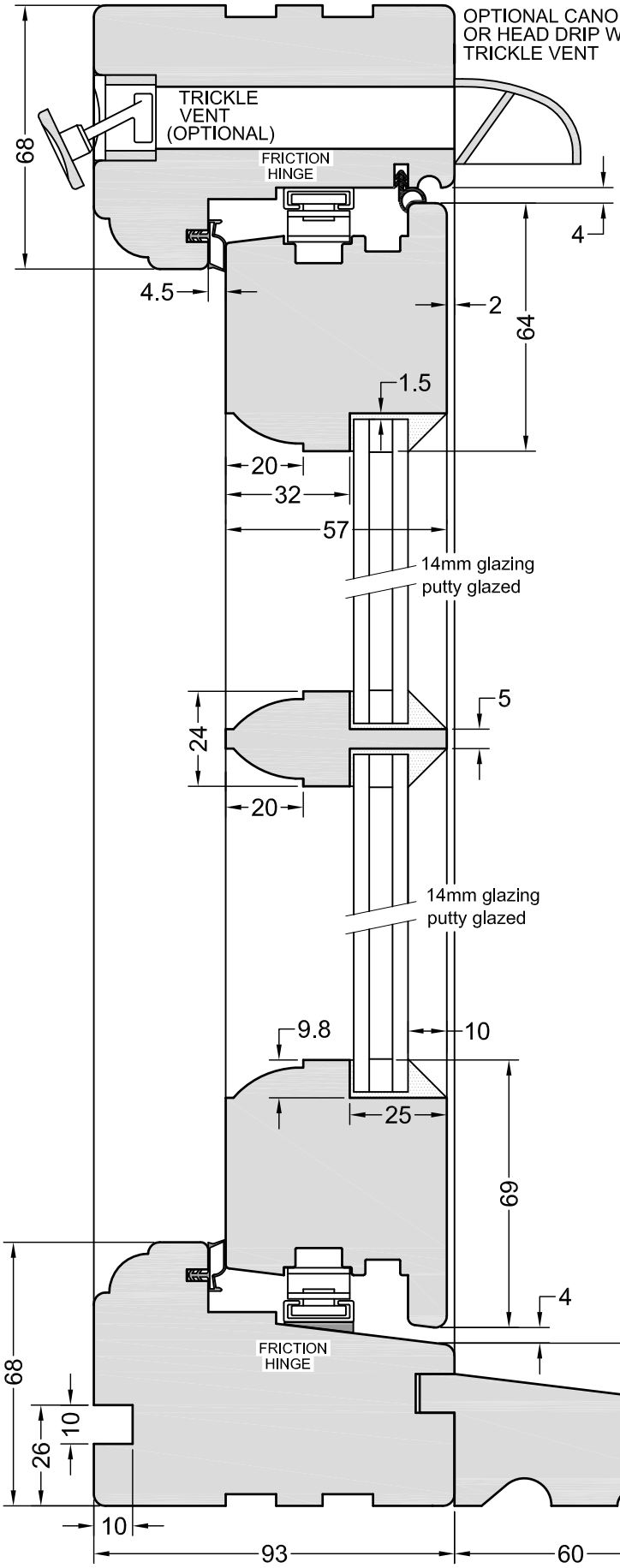

WINDOW BOARD GROOVE AS STANDARD
NO WINDOW BOARD GROOVE: OPTIONAL

HEAD/CILL SECTION

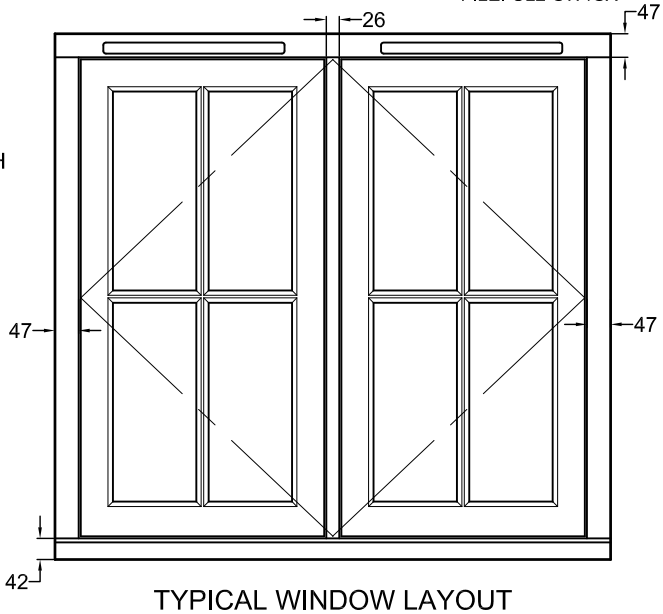

TYPICAL WINDOW LAYOUT

SPECIFICATIONS

FRAME	68x93mm HEAD, JAMBS, CILL, MULLION & TRANSOM.
SASH	64x57mm TOP RAIL & STILES, . 69x57mm BOTTOM RAIL, Drained and Vented.
PROFILE	OVOLO (shown) or LAMBS TONGUE
CILL PROJECTION	60mm (shown) Additional Options: Flush, 35mm or 85mm.
GLAZING	14mm Low E Sealed Unit, Putty glazed system. 4mm/6mm Aluminium Spacer/4mm. Krypton filled cavity. Outer perimeter has black Aluminium Spacer Alternative glazing options: 14.8mm (6.8 laminated / 4 / 4)

HARDWARE/FITTINGS

STAINLESS STEEL CONCEALED FRICTION HINGE
Options
SIDE SWING standard Friction Hinge
SIDE SWING EGRESS for escape openings
SIDE SWING EASY CLEAN
SIDE SWING RESTRICTOR with restrictor built into Hinge
Seperate Enhanced restrictor option available
Multi-point locking System
Lift-Up Block fitted to Cill
Cranked Locking Handles, available in Polished Brass, Polished Chrome, Satin Chrome, Bright Bronze, Satin Bronze, Black, White.
Monkey Tail Handles available in Black

TRICKLE VENTS

Trickle Vents (4600EA) can be fitted to Head. Timber Head Drip or canopy fitted.
Trickle Vents are available in White or Brown only.

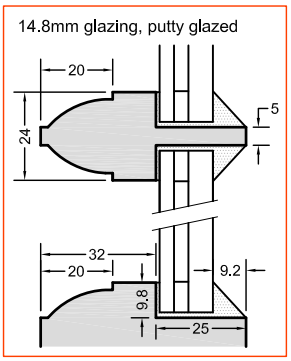

DUE TO PROGRESSIVE DEVELOPMENT
MUMFORD & WOOD LIMITED RESERVE
THE RIGHT TO MODIFY OR CHANGE
SPECIFICATIONS WITHOUT PRIOR NOTICE

THIS DRAWING & SPECIFICATIONS ARE THE PROERTY OF MUMFORD & WOOD Ltd. THEY ARE ISSUED IN STRICT CONFIDENCE AND SHALL NOT BE REPRODUCED, COPIED OR USED AS THE BASIS FOR MANUFACTURING WITHOUT WRITTEN PERMISSION.

MUMFORD & WOOD

TOWER BUSINESS PARK,
KELVEDON ROAD
TIPTREE, ESSEX
CO5 0LX
Tel: 01621 818155 FAX: 01621 818175
EMAIL: sales@mumfordwood.com
WEB: www.mumfordwood.com

ALL MEASUREMENTS ARE FINISHED DIMENSIONS IN MM. DO NOT SCALE DRAWING!