Bought by- Jonathan Tingley, Company - Geo-Environmental Services Ltd, on 13 March 2014 Latest version. Not to be distributed/networked. For multi-user access www.bsigroup.com/license © The British Standards Institution 2014

BS 8576:2013



BSI Standards Publication

Guidance on investigations for ground gas – Permanent gases and Volatile Organic Compounds (VOCs)

bsi.

...making excellence a habit.™

Publishing and copyright information

The BSI copyright notice displayed in this document indicates when the document was last issued.

© The British Standards Institution 2013

Published by BSI Standards Limited 2013

ISBN 978 0 580 75667 2

ICS 13.080.01

The following BSI references relate to the work on this standard:
Committee reference EH/4
Draft for comment 12/30248026DC

Publication history

First published April 2013

Amendments issued since publication

Date	Text affected

Bought by- Jonathan Tingley, Company - Geo-Environmental Services Ltd, on 13 March 2014 Latest version. Not to be distributed/networked. For multi-user access www.bsigroup.com/license © The British Standards Institution 2014

Contents

Foreword *iii*

1 Scope *1*
2 Normative references *1*
3 Terms and definitions *2*
4 General *4*
5 Health and safety *5*
6 Development of preliminary conceptual model and preliminary risk assessment *7*
7 Setting objectives *13*
8 Developing the investigation strategy *13*
8.1 General considerations *13*
8.2 Preparation of monitoring and sampling plan *15*
8.3 Installation options *16*
8.4 Location of monitoring installations *24*
8.5 Response zones (monitoring depths) *25*
8.6 Timing and frequency of monitoring of permanent gases *26*
8.7 Deciding the appropriate level of gas monitoring of permanent gases *31*
8.8 Timing and frequency of monitoring of VOCs *32*
8.9 Personnel *32*
9 Field work – permanent gases *33*
9.1 General considerations *33*
9.2 Construction of gas monitoring wells *34*
9.3 Instruments for on-site use *42*
9.4 Recording information when monitoring or sampling *49*
9.5 Making on-site measurements *49*
9.6 Sampling for laboratory measurements *53*
9.7 Storage and transport of samples for laboratory analysis *54*
10 Field work – VOCs *54*
10.1 General considerations *54*
10.2 Construction of unsaturated zone gas monitoring wells to sample for VOCs *54*
10.3 Construction of near-surface monitoring ports to sample VOCs in ground gas *59*
10.4 Installation of a flux box to sample VOCs in ground gas *60*
10.5 Instruments for on-site use *61*
10.6 Recording information when monitoring or sampling *62*
10.7 Making on-site measurements *63*
10.8 Sampling for laboratory measurements *63*
10.9 Storage and transport of samples for laboratory analysis *68*
11 Monitoring and sampling reports *69*
12 Quality assurance *70*
12.1 General *70*
12.2 Field checks on instruments *70*
12.3 Calibration of instruments *70*
12.4 Chain of custody *71*
12.5 Quality control samples *71*
13 Refining the conceptual model *73*
14 Report on the investigation *73*

Annexes
Annex A (informative) Regulation of land contamination *74*
Annex B (informative) Radon *78*
Annex C (informative) Anaerobic degradation and the formation of methane and carbon dioxide *85*
Annex D (informative) Sources, properties and hazards of selected gases *87*
Annex E (informative) Sampling protocols – Permanent gases *94*

Bought by- Jonathan Tingley, Company - Geo-Environmental Services Ltd, on 13 March 2014 Latest version. Not to be distributed/networked. For multi-user access www.bsigroup.com/license © The British Standards Institution 2014

Annex F (informative) Assessment of whether sufficient gas monitoring data have been collected *95*
Annex G (informative) Portable equipment for measurement of concentrations of permanent gases *98*
Annex H (informative) Apparatus for measurement of gas-flow rate *100*
Annex I (informative) Installation and sampling train leakage tests *101*

Bibliography *104*

List of figures

Figure 1 – Example conceptual model cross section and targeted response zones for permanent gases *9*
Figure 2 – Example conceptual model cross section and targeted response zones for permanent gases *10*
Figure 3 – Example of conceptual model cross section and targeted response zones for VOCs *11*
Figure 4 – Key ground gas ingress routes and accumulation areas within buildings *12*
Figure 5 – High-frequency data *29*
Figure 6 – Decision matrix for initial monitoring *31*
Figure 7 – Typical well design *36*
Figure 8 – Driven monitoring probe *40*
Figure 9 – Small diameter sampling probes for gas monitoring *41*
Figure 10 – Example monitoring well construction for collection of ground gas samples for VOCs analysis *58*
Figure C.1 – Decomposition of domestic waste *86*
Figure I.1 – Potential sources of leakage when collecting ground gas samples *102*

List of tables

Table 1 – Methods of intrusive investigation that can also be used for sampling of permanent gases *18*
Table 2 – Minimum specifications for ground gas analysis *43*
Table 3 – Portable equipment to measure permanent gases *44*
Table 4 – Portable equipment to measure flow rates and borehole pressure *45*
Table 5 – Options for monitoring well installations to sample VOCs in ground gases in the unsaturated zone *56*
Table 6 – Portable equipment to measure VOCs in ground gases *61*
Table 7 – Containers and adsorbent devices for sampling ground gas for VOCs analysis *65*
Table 8 – Acceptance criteria for quality control samples *73*
Table B.1 – Results of screening measurements and conclusions *80*
Table D.1 – Effects of carbon monoxide *89*
Table E.1 – Pre-site checks *94*
Table E.2 – Calibration chart *94*
Table E.3 – Meteorological conditions *94*
Table E.4 – Actions at each sampling point *95*
Table E.5 – Monitoring results during sampling *95*
Table F.1 – Assessing sufficiency of data *96*
Table F.2 – Summary of data *96*
Table F.3 – Assessing sufficiency of data *97*
Table G.1 – Portable equipment to measure permanent gases *98*
Table H.1 – Apparatus for measuring gas flow rate *100*

Summary of pages

This document comprises a front cover, an inside front cover, pages i to vi, pages 1 to 110, an inside back cover and a back cover.

Bought by- Jonathan Tingley, Company - Geo-Environmental Services Ltd, on 13 March 2014 Latest version. Not to be distributed/networked. For multi-user access www.bsigroup.com/license © The British Standards Institution 2014

Foreword

Publishing information

This British Standard is published by BSI Standards Limited, under licence from The British Standards Institution, and came into effect on 30 April 2013. It was prepared by Technical Committee EH/4, *Soil Quality*. A list of organizations represented on this committee can be obtained on request to its secretary.

Information about this document

This standard is intended to be read in conjunction with BS 10175, *Investigation of potentially contaminated sites – Code of practice*.

Test laboratory accreditation. Users of this British Standard are advised to consider the desirability of selecting test laboratories that are accredited to BS EN ISO/IEC 17025 by a national or international accreditation body.

Use of this document

As a guide, this British Standard takes the form of guidance and recommendations. It should not be quoted as if it were a specification or a code of practice and claims of compliance cannot be made to it.

Presentational conventions

The guidance in this standard is presented in roman (i.e. upright) type. Any recommendations are expressed in sentences in which the principal auxiliary verb is "should".

Commentary, explanation and general informative material is presented in smaller italic type, and does not constitute a normative element.

Contractual and legal considerations

This publication does not purport to include all the necessary provisions of a contract. Users are responsible for its correct application.

Compliance with a British Standard cannot confer immunity from legal obligations.

Bought by- Jonathan Tingley, Company - Geo-Environmental Services Ltd, on 13 March 2014 Latest version. Not to be distributed/networked. For multi-user access www.bsigroup.com/license © The British Standards Institution 2014

Introduction

This standard, which is intended to be used in conjunction with BS 10175, provides guidance on the monitoring and sampling of ground gases. It covers volatile organic compounds (VOCs) and permanent gases such as carbon dioxide, methane and oxygen with particular reference to development sites and the risks posed by gassing sites to neighbouring land and developments. However, it is also relevant to investigations under Part 2A of the Environmental Protection Act 1990 [1] and under the Environmental Damage Regulations [2] (e.g. in respect of spills of oils, etc.).

A variety of gases might be present in the ground naturally, or as a result of contamination, or deposition of wastes. In addition to the main components found in air (nitrogen, oxygen, carbon dioxide), ground gas can contain other gases (methane, carbon monoxide, hydrogen sulfide, ammonia, helium, neon, argon, xenon, radon, etc.). It can also contain volatile organic compounds or inorganic vapours (mercury) which are of special interest in relation to the investigation of soil and groundwater contamination.

In order to complete an assessment of the risks posed by the presence of permanent and other ground gases, it is necessary to understand the potential sources of gas in and around a site. It is important to collect information on the other aspects of the site, including for example the history of the site, the natural and man-made geology of the site and surrounding areas, the hydrogeological regime, and the uses of the site and surrounding land. It is also useful to collect data on the nature of man-made soils including measurements of organic carbon content. These aspects are dealt with in BS 10175.

This information is used to develop a conceptual model of the site and surrounding area. The conceptual model is a description and/or representation of the site, incorporating what is known about the ground and groundwater conditions; the actual and potential contamination; the actual or potential presence of naturally occurring hazardous substances; the physical conditions and environmental setting; the receptors; and potential pathway linkages between contamination sources and receptors.

Development of the conceptual model requires an understanding of both the short-term (e.g. explosion or asphyxiation) and long-term hazards posed by the permanent gases and VOCs that might be present. Some relevant information is provided in Annex D of this standard.

Depending upon the objectives of the investigation, it could be relevant to consider new future receptors associated with the construction and completion of a new development, as well as existing receptors. Potential changes in the environmental setting (e.g. rising ground and surface water level) might also be relevant. The conceptual model leads to the formulation of contamination-related and other hypotheses, which the investigation process examines through the collection of relevant data.

The conceptual model is first formulated during the preliminary investigation (desk study and site reconnaissance) and informs subsequent investigations, if these are necessary, to meet the objectives of the overall investigation. One of the objectives will be reduction of uncertainty in the conceptual model. Consequently, the conceptual model is subject to regular review and updating as the work progresses.

Bought by- Jonathan Tingley, Company - Geo-Environmental Services Ltd, on 13 March 2014 Latest version. Not to be distributed/networked. For multi-user access www.bsigroup.com/license © The British Standards Institution 2014

Site investigation is an integral part of risk assessment (see CLR 11 [3]) and throughout this standard, the need for the information requirements for satisfactory risk assessment to inform the design of the site investigation programme is emphasized. However, there will be occasions where a risk assessment has been completed, and the primary purpose of the investigation is to collect additional information to aid design of protective measures, whilst of course, using the newly collected information to refine the risk assessment. Guidance is not provided on risk evaluation and characterization but guidance can be found in CIRIA C665 [4], CIRIA Report C682 [5], *Ground Gas Handbook* [6] and *Guidance on managing the risk of hazardous gases when drilling near coal* [7]. A hazard-fault/event-consequence probability analysis might be required when dealing with gas (see CIRIA report 152, *Risk assessment for methane and other gases in the ground* [8]). BS 8485, which is expected to be revised after publication of this standard (April 2013), gives recommendations and describes methods for the assessment of methane and carbon dioxide during new development of affected sites and appropriate protective measures for buildings. It does not consider ground gases other than methane and carbon dioxide. Guidance on protective measures has also been published by others (see references [9] to [13] in the Bibliography).

Carbon dioxide and methane are both powerful greenhouse gases and their uncontrolled release from landfills, etc. into the atmosphere is of concern in respect of their potential to contribute to climate change (in this sense the atmosphere is a receptor). The investigation of landfills, coal mines and other potential sources in order to design schemes for collection and/or beneficial use of gaseous emissions is outside the scope of this standard. Guidance on this has been published by the Environment Agency and others (see Bibliography for useful further reading).

The design of control measures (e.g. to prevent gas migration to adjacent land) and protective measures for buildings and other structures is outside the scope of this standard. However, when selecting such measures, it is advisable to consider the possible effects of the proposed measures on climate change in accordance with national policy.

As far as practical, the guidance on investigations for permanent gases and VOCs is provided together in an integrated text. Only where the approach required differs are they dealt with separately. It is important to consider them together rather than as separate issues because they commonly occur together. For example, petroleum hydrocarbons will degrade to form carbon dioxide under aerobic conditions and to form carbon dioxide and methane under anaerobic conditions. Indeed, the presence of carbon dioxide and/or methane is a powerful indicator that natural attenuation of hydrocarbons is taking place. Similarly, tipped wastes sometimes contain soil contaminated with VOCs and/or drums of VOCs. Radon could also be present in conjunction with other gases and VOCs.

BS 10175 advises early consultation with regulators when potentially contaminated sites are to be investigated. This advice applies equally to investigations for ground gas. Annex A describes the regulatory framework in the UK in March 2013 and the roles performed by different regulators. It is expected that Annex A of this standard will supersede BS 10175:2011, Annex I, when BS 10175 is amended to take account of the publication of this standard.

Bought by- Jonathan Tingley, Company - Geo-Environmental Services Ltd, on 13 March 2014 Latest version. Not to be distributed/networked. For multi-user access www.bsigroup.com/license © The British Standards Institution 2014

This page deliberately left blank

1 Scope

This British Standard provides guidance on the monitoring and sampling of ground gases. It covers volatile organic compounds (VOCs) and permanent gases such as carbon dioxide, methane and oxygen. It is intended to be read in conjunction with BS 10175.

Guidance is not provided on:

- risk evaluation and characterization;

NOTE 1 Guidance can be found in CLR 11 [3], CIRIA C665 [4], CIRIA C682 [5] and the Ground Gas Handbook [6].

- selection and design of protective measures;
- the verification of protective measures, although the site investigation methodologies described can be used when appropriate;
- the sampling of atmospheric gases;
- monitoring and sampling for radon.

NOTE 2 Radon occurs naturally at varying concentrations in large parts of the United Kingdom. It is commonly present in mine gas and can also be released from groundwater when it is extracted from the ground. It can also arise from deposited wastes such as those from the nuclear industry, phosphorus slags, and coal ash. Its importance lies in the fact that the risks associated with exposure to it are serious and its effects on the human condition are backed by extensive epidemiological information. There are established or draft International Standards for investigation and determination of radon in soils (BS ISO 18589 series) and in air (BS ISO 11665-1). The latter provides guidance on analysis of historic records, site reconnaissance, identification of preferential migration pathways, development of a sampling plan and how to measure radon in air once it has been emitted from the ground (see Annex B for further information). At the time of publication of this standard, the committee are not aware of any international standards or other authoritative guidance on the measurement and sampling of radon in the ground analogous to that provided in this standard for permanent gases and VOCs. The state-of-the-art is not sufficiently developed in the UK to provide such guidance as part of this standard but some preliminary guidance is provided for information in Annex B.

*NOTE 3 The term "permanent gas" (**3.10**) is used rather than "bulk gas" as used in much UK guidance. The two are not synonyms. "Permanent gas" is an accepted international term in use for over 100 years. Its usage does not indicate any relationship between the proportion of a gas present and its properties in the way that the terms "bulk gas" and "trace gas" do. These terms were originally used in connection with "landfill gas". "Permanent gas" is considered more appropriate for the range of sources covered by this standard.*

NOTE 4 "Ground gas" has the same meaning as "soil gas" as defined in BS ISO 11074, i.e. "gas and vapours in the pore spaces of soils".

2 Normative references

The following documents, in whole or in part, are normatively referenced in this document and are indispensable for its application. For dated references, only the edition cited applies. For undated references, the latest edition of the referenced document (including any amendments) applies.

BS 5930, *Code of practice for site investigations*

BS 10175, *Investigation of potentially contaminated sites – Code of Practice* [1)]

[1)] BS 10175:2011 is also referenced in this standard informatively.

Bought by- Jonathan Tingley, Company - Geo-Environmental Services Ltd, on 13 March 2014 Latest version. Not to be distributed/networked. For multi-user access www.bsigroup.com/license © The British Standards Institution 2014

BS ISO 10381-3, *Soil quality – Sampling – Part 3: Guidance on safety*

BS ISO 11074, *Soil quality – Vocabulary*

BS EN ISO 14688-1, *Geotechnical investigation and testing – Identification and classification of soil – Part 1: Identification and description*

BS EN ISO 14688-2, *Geotechnical investigation and testing – Identification and classification of soil – Part 2: Principles for a classification*

BS EN ISO 14689-1, *Geotechnical investigation and testing – Identification and classification of rock – Part 1: Identification and description*

3 Terms and definitions

For the purposes of this British Standard, the terms and definitions given in BS 10175 and BS ISO 11074 and the following apply.

NOTE Where definitions differ between BS 10175 and BS ISO 11074, those from BS 10175 are to be used.

3.1 continuous monitoring
high-frequency monitoring at short intervals using automatically recording equipment

NOTE Intervals typically vary between a few minutes and a few hours but may be longer.

3.2 gas monitoring port
narrow diameter monitoring tube designed for sampling of ground gas

NOTE The tube is of short length and would typically extend only a short distance through a floor slab or similar slab.

3.3 grouped installation
a number of separate monitoring installations located close to one another

3.4 high-frequency monitoring
periodic monitoring in which the interval between monitoring events is short

NOTE 1 The underlying principal is that the time interval between monitoring events is less than the time that the conceptual model suggests important parameters are likely to vary.

NOTE 2 Intervals between monitoring events are typically measured in hours rather than days.

NOTE 3 Monitoring may be carried out manually or using automatically recording permanent in-well equipment.

*NOTE 4 High-frequency monitoring is usually carried out over one or more comparatively short periods of time (see **9.5.2**).*

3.5 monitoring event
occasion on which ground gas data, other relevant information or samples are collected

NOTE Periodic monitoring, high-frequency monitoring and continuous monitoring typically comprise a number of monitoring events varying from a few to multitudinous.

3.6 multi-level installation
number of monitoring installations installed in one borehole with separate response zones

Bought by- Jonathan Tingley, Company - Geo-Environmental Services Ltd, on 13 March 2014 Latest version. Not to be distributed/networked. For multi-user access www.bsigroup.com/license © The British Standards Institution 2014

3.7 near-slab monitoring location
near-surface (sub-hardstanding) ground gas sampling location that is close to, but not under, the foundation of a building

NOTE Based on CIRIA Report C682 [5].

3.8 nested installation
number of monitoring installations installed in one borehole

3.9 periodic monitoring
spot monitoring carried out at intervals over an extended length of time

NOTE Monitoring is typically carried out weekly, fortnightly, monthly or quarterly with the time between monitoring events being extended as understanding of the ground gas regime develops.

3.10 permanent gas
element or compound that is a gas at all ambient temperatures likely to be encountered on the surface of the earth

NOTE 1 ISO DIS 11074:2011 defines permanent gas as: "Element or compound with a boiling point below 213 K at atmospheric pressure." This definition is not appropriate for use in this standard because the temperature of 213 K is arbitrary and excludes from the definition hydrogen sulfide and possibly some other gases (the boiling point of hydrogen sulphide is –60 °C/213 K).

NOTE 2 Under extreme hot circumstances, some substances might become gases that would not otherwise be. These are not permanent gases.

3.11 response zone
section of the monitoring well or tube which allows the entry of ground gases into the monitoring point for subsequent sampling

NOTE The response zone is defined by the location of the granular annulus rather than just the slotted section of the tube.

3.12 single installation
monitoring well or similar means of enabling ground gas to be sampled from a single response zone

3.13 spot monitoring
collection of ground gas data at a point in time

3.14 sub-slab monitoring location
near-surface (sub-hardstanding) ground gas sampling location under the floor or foundation of a building or other structure

3.15 Volatile Organic Compound (VOC)
organic compound that is volatile under normal environmental/atmospheric conditions, although it can be found in the ground in the solid, liquid and dissolved phase form as well as in gaseous phase

NOTE 1 From CIRIA Report C682 [5].

NOTE 2 VOC can also be defined as an "organic compound which is liquid at 20 °C and which generally has a boiling point below 180 °C" (based on ISO DIS 11074:2011).

NOTE 3 Examples include single-ring aromatic hydrocarbons and other low boiling halogenated hydrocarbons, which are used as solvents or fuels, and some degradation products.

Bought by- Jonathan Tingley, Company - Geo-Environmental Services Ltd, on 13 March 2014 Latest version. Not to be distributed/networked. For multi-user access www.bsigroup.com/license © The British Standards Institution 2014

4 General

Toxic, asphyxiating and explosive gases can enter buildings and other structures and thus variously pose potential risks to occupants and users, and to the structures themselves (see Figure 4). Gases can also be injurious to plants and other components of natural ecosystems.

In order to complete an assessment of the risks posed by the presence of permanent and other ground gases, it is necessary to understand the potential sources of gas in and around a site. It is usually also necessary to collect information on other aspects of the site and the surrounding land, including for example the natural and man-made geology of the site and surrounding areas, the hydrogeological regime, and the current and historical uses of the site and surrounding land. These aspects are dealt with in BS 10175.

Methane and carbon dioxide can originate from land-filled wastes, degradable material present within the soil matrix of the made ground beneath a brownfield site, migrating landfill leachate, petroleum hydrocarbons, silt in docks and rivers, etc., coal deposits, peat, natural deposits (e.g. chalk and alluvial deposits), leaks of mains gas (natural gas) and sewer gas. Wherever biodegradable materials are present, microbial activity produces methane and/or carbon dioxide depending on whether conditions are aerobic or anaerobic. A number of additional trace gases can also be present.

NOTE 1 Properly designed and installed drainage systems are provided with vents to permit controlled release of gases and to permit entry of air so that the system operates at atmospheric pressure throughout. Thus there would not be sufficient pressure to drive sewer gas into the ground because it would be emitted through the vents provided. However, there could be occasions this might not be the case when the pipes or vents become blocked or damaged. For example, vents can sometimes become blocked by snow and ice. Under such circumstances, sewer gas might escape into the ground through any cracks or weaknesses in the system.

NOTE 2 Gas is likely to be generated if sewage leaks into the ground through a cracked pipe. The sewage can seed gas generation in materials it comes into contact with (e.g. old landfill material).

Permanent gases such as methane, carbon dioxide and carbon monoxide are also produced by coal measure strata and can emanate from old mine workings (see *Methane: its occurrence and hazards to construction* [14]). Burning coal measure strata, including waste in colliery spoil tips, can release carbon monoxide, as can smouldering domestic waste. Under some circumstances, sulfur rich deposits such as gypsum waste and some slags can release substantial quantities of hydrogen sulfide, for example, when sulfur-bearing wastes and domestic refuse are mixed.

Volatile organic compounds (VOCs) include, for example, halogenated hydrocarbons such as trichloroethene, non-halogenated hydrocarbons such as benzene, and organosulfur compounds such as thiols (mercapatans). They can occur as a component of ground gas originating from historically contaminated ground, spills and leaks from industry, commercial or residential properties (e.g. from pipelines, storage facilities, and at the point of use or dispensing), land-filled wastes and from naturally occurring sources.

NOTE 3 Some of these compounds are found in ambient air.

The choice of sampling and monitoring techniques should be based upon the conceptual model and be designed to achieve the objectives of the investigation, bearing in mind the requirements of any subsequent analytical procedures and the need to provide relevant data of sufficient quantity and quality. Consideration should also be given to the nature of ground under investigation, as well as the nature and distribution of contamination, the geology and the hydrogeology. Every effort should be made to avoid cross-contamination and at no point should underlying aquifers be put at risk.

Bought by- Jonathan Tingley, Company - Geo-Environmental Services Ltd, on 13 March 2014 Latest version. Not to be distributed/networked. For multi-user access www.bsigroup.com/license © The British Standards Institution 2014

NOTE 4 Information on the origins and properties of ground gases, factors governing their behaviour in the ground, and their entry into buildings and other structures is provided in Annex C and Annex D.

All exploratory holes should be properly decommissioned on the completion of investigation/monitoring works to prevent preferential gas and water pathways developing. This usually requires the holes to be pressure grouted.

NOTE 5 The Environment Agency has published guidance on the decommissioning of monitoring wells [15].

5 Health and safety

WARNING. Some persons are allergic/sensitive to traces of some gases and are liable to collapse and require assistance if affected. Although unlikely, the work should be conducted with this possibility in mind. This warning refers to work in the open and should not be confused with the requirements for work in enclosed spaces.

Health and safety issues should be considered at all times. BS ISO 10381-3, BS 10175, BS 5930 and industry guidance should be consulted for detailed guidance.

Before intrusive works begin, a comprehensive check should be made of the ground to ensure that no services or structures are at risk and no other hazards are present (see *Guidance for safe intrusive activities on contaminated or potentially contaminated land* [16]).

Training should be given to ensure that personnel understand the necessary precautions.

Personnel should be provided with suitable protective equipment, taking into account the potential toxicity and other hazards anticipated (assumed or measured).

Water flushing should be used when drilling in productive coal measures (see *Application for permission to enter or disturb coal authority mining interests* [17]).

The presence of asbestos fibres or asbestos-containing materials (e.g. fragments of asbestos cement sheeting) in the ground can present risks to health and requires particular care in the selection of appropriate sampling techniques and design of sampling procedures. Contingency plans should always be in place so that investigation personnel know how to proceed if any unexpected hazard, including asbestos, is encountered. (See *Site Investigation Asbestos Risk Assessment* [18].)

NOTE 1 Guidance on safe drilling and investigation practices is given in a number of industry documents (e.g. Reference 16).

NOTE 2 Carbon dioxide and some organic pollutants in the gas phase in soil and sub-soil can present toxicological risks of varying severity. Methane and some volatile organic compounds can form explosive mixtures with air. Large concentrations of carbon dioxide (in addition to being toxic) and methane can cause asphyxiation due to the associated reduction in oxygen concentrations. Nitrogen is an asphyxiant and is to be regarded as hazardous in the absence of sufficient oxygen, regardless of why this is the case. The properties and hazards posed by selected gases are described in Annex D.

Bought by- Jonathan Tingley, Company - Geo-Environmental Services Ltd, on 13 March 2014 Latest version. Not to be distributed/networked. For multi-user access www.bsigroup.com/license © The British Standards Institution 2014

NOTE 3 Injudicious choice of drilling method can cause risks to drillers due to gas coming out of boreholes. It can also cause risks to the public (e.g. the occupants and users of neighbouring buildings due to displacement of gas from the location where drilling is taking place – see HSE Position Statement, Carbon Monoxide [19] and Guidance on managing the risk of hazardous gases when drilling near coal [7]).

a) A number of serious incidents have occurred as a result of surface emissions of toxic gases into houses during the investigation and treatment of nearby former coal mine workings. Of particular concern are incidents where carbon monoxide has been measured or inferred as entering houses from the mine workings below. Mine workings can also contain methane, hydrogen sulfide, carbon dioxide and oxygen-deficient air, all of which can be hazardous to health if emitted at the surface (see [7] and [19]). Reference 7 gives guidance on the general procedures to be adopted when drilling or piling into former coal mine workings (including mine entries) and unworked coal. Following the advice contained in the guidance is likely to reduce the risk of a dangerous incident happening.

b) Following a reported leak of petrol (over 60 000L) at the Bontddu Service Station in Autumn 1996, exploratory investigations were undertaken to assess the extent and severity of the associated contamination. The petrol vapours present in the subsurface had migrated beneath a neighbouring residential property, accumulated and ignited, resulting in an explosion. Later investigations into the incident suggested that the use of air-flush drilling techniques might have exacerbated the potential for the migration of the vapours and then explosion – see C682 [5] and Recommendations in the report into the Bontddu Petrol Incident [20].

NOTE 4 Drilling in productive Coal Measures requires a permit from the Coal Authority (see Application for permission to enter or disturb coal authority mining interests [17]).

NOTE 5 Radon occurs naturally at varying concentrations in large parts of the United Kingdom. It is commonly present in mine gas and can also be released from groundwater when it is extracted from the ground. It might also arise from deposited wastes such as those from the nuclear industry, phosphorus slags, and coal ash. Appropriate safety precautions are required when it is considered that radon could be encountered at high enough levels and for sufficient duration to pose a hazard. Radon exposure in the open air around a small diameter borehole is not likely to be significant.

NOTE 6 It might sometimes be necessary to use electrical equipment and tools which are suitable for use in explosive atmospheres (www.hse.gov.uk/fireandexplosion).

NOTE 7 Fuel service stations can present particular health and safety problems, especially if they are operational. They require careful choice of equipment and operational procedures. There will often be areas around tanks, fuel lines and fuelling points in which investigation is not permitted. It is essential that the locations of old decommissioned tanks as well as operational tanks are established before any investigation is carried out. Records held by operators are seldom complete and it might be necessary to carry out detailed searches of planning records back to when the service station was first opened. The local Petroleum Officer might hold relevant records but these are often discarded once a service station has been closed. Geophysical investigation might be required to locate old tanks.

Bought by- Jonathan Tingley, Company - Geo-Environmental Services Ltd, on 13 March 2014 Latest version. Not to be distributed/networked. For multi-user access www.bsigroup.com/license © The British Standards Institution 2014

6 Development of preliminary conceptual model and preliminary risk assessment

In order to determine where and how to monitor, a preliminary conceptual model should be prepared prior to the investigation. This requires identification of:

- potential sources of hazardous gases based on a review of the current and previous uses of the site and neighbouring land, and the underlying natural and man-made geology and hydrogeology;
- potential human and other receptors (e.g. buildings and structures, flora, the atmosphere, ground water and surface water) both on-site and off-site;
- credible pathways of possible exposure of the receptors, taking into account what is known about the geology and hydrogeology, building construction and services layout, etc.;
- forseeable events such as flooding, changes in groundwater level, global warming, extreme weather conditions, the closure of mines, and possible changes to the gas regime caused by future development.

If the ground gas investigation is to assess migration of gas outside a source, geological cross-sections should be provided showing credible migration pathways and sources of gas. Cross-sections should also be prepared if the investigation is to assess gas emissions to buildings or other receptors immediately above the source. The cross-sections should be used to decide where the response zones of monitoring wells are to be located.

The cross-section should preferably be to natural scale (i.e. the vertical scale should not be exaggerated), otherwise it can give an unrealistic picture of potential gas migration pathways. If an exaggerated scale is used for greater clarity, this should be highlighted to avoid giving an unrealistic impression of the site and potential migration pathways.

NOTE 1 Examples of conceptual model cross sections for permanent gases are provided in Figure 1 and Figure 2, and for VOCs in Figure 3. Figure 4 shows typical routes of entry of ground gas into buildings.

NOTE 2 Detailed guidance on preliminary site investigation including the preparation of a desk study, site reconnaissance and development of a preliminary conceptual model is provided in BS 10175.

NOTE 3 It is important to consult "as built" information on drainage layouts, foundations and floor structures (when relevant), and tank locations, etc. These are often available through the Building Control records, although the permission of the site or building owner is usually required to access these. Drainage records might be particularly important as revealing potential gas migration routes within sites and for migration onto and off sites.

The conceptual model is first formulated during the preliminary investigation (desk study and site reconnaissance) and informs subsequent investigations, if these are necessary, to meet the objectives of the overall investigation. It leads to the formulation of ground gas-related hypotheses, which the investigation process examines through the collection of relevant data. The conceptual model can also be used as the basis for a preliminary risk assessment and the design of the investigation for ground gases. It should be updated as necessary as the investigation progresses.

One of the objectives of an investigation for ground gas is reduction of uncertainty in the conceptual model by identifying other information required to enable a formal risk assessment to be prepared once the investigation for ground gases has been completed. The risk assessment should be updated as necessary as the investigation progresses.

Bought by- Jonathan Tingley, Company - Geo-Environmental Services Ltd, on 13 March 2014 Latest version. Not to be distributed/networked. For multi-user access www.bsigroup.com/license © The British Standards Institution 2014

NOTE 5 It is important to recognize that there might be several potential sources of gas in or around a site, e.g. marshland, buried sediments and landfills.

NOTE 6 Consideration of current uses includes the presence of services that might leak hazardous gas, such as gas supply pipes and other services which might provide effective pathways for the enhanced migration of gas via the granular material in which they are usually installed.

*NOTE 7 As mentioned in BS 10175:2011, **6.2.1.2.1**, Note 2, it is possible to purchase reports from a number of private companies that provide a collation of available information relevant to characterizing a site's history, geology, hydrogeology and environmental setting, etc. Although very helpful, these are seldom sufficient on their own to characterize a site in terms of the potential for hazardous ground gases to be present. It is important to cross-check information from various sources because there can be errors in the data banks from which they are derived (e.g. they might not be entirely up-to-date).*

Bought by- Jonathan Tingley, Company - Geo-Environmental Services Ltd, on 13 March 2014 Latest version. Not to be distributed/networked. For multi-user access www.bsigroup.com/license © The British Standards Institution 2014

Bought by- Jonathan Tingley, Company - Geo-Environmental Services Ltd, on 13 March 2014 Latest version. Not to be distributed/networked. For multi-user access www.bsigroup.com/license © The British Standards Institution 2014

Figure 1 **Example conceptual model cross section and targeted response zones for permanent gases**

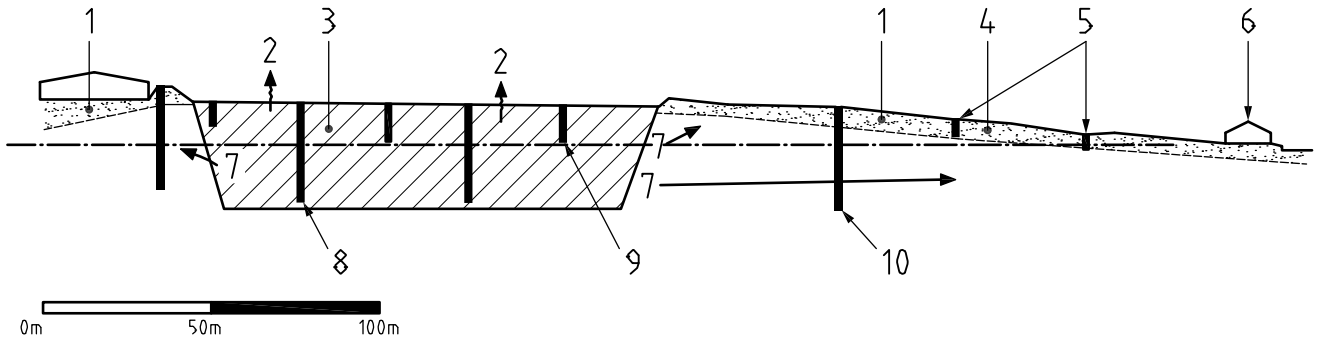

Key

1	Fluvio glacial deposits	6	Houses
2	Ground gas emissions from surface	7	Lateral migration of ground gas into surrounding granite
3	Made ground	8	Wells within landfill with response zones below water table
4	Fluvio glacial deposits	9	Wells within landfill with response zones above water table
5	Shallow wells in drift deposits	10	Well intercepting deep migration of ground gas into surrounding granite

© The British Standards Institution 2013

Bought by- Jonathan Tingley, Company - Geo-Environmental Services Ltd, on 13 March 2014 Latest version. Not to be distributed/networked. For multi-user access www.bsigroup.com/license © The British Standards Institution 2014

Figure 2 **Example conceptual model cross section and targeted response zones for permanent gases**

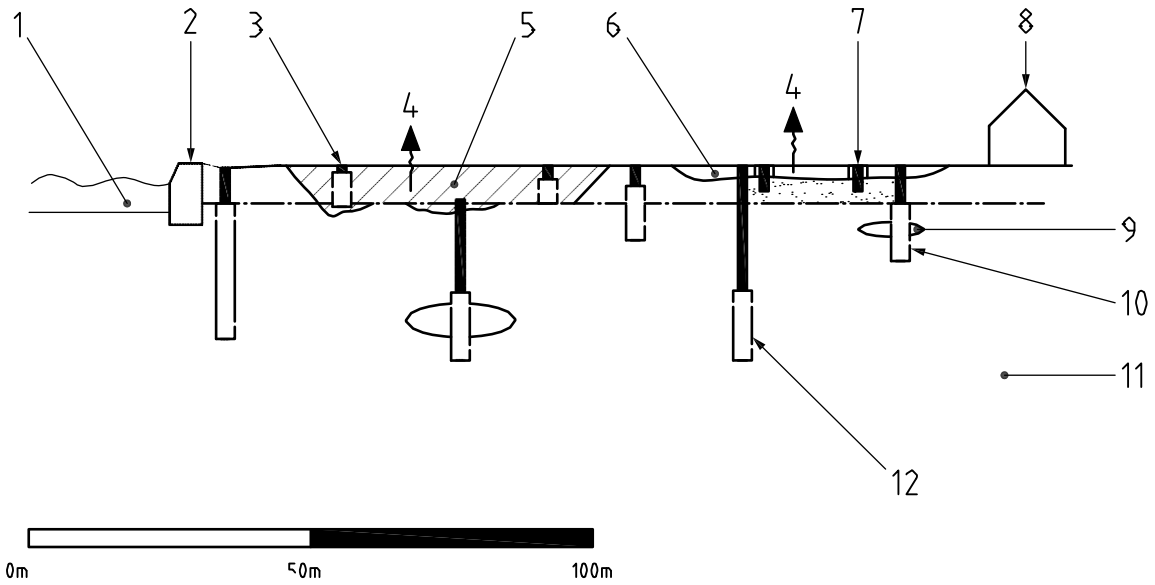

Key

1	Tidal river	7	Wells within made ground
2	River wall	8	Houses
3	Wells within landfill	9	Peat layer
4	Ground gas emissions from surface	10	Wells within peat
5	Old landfill	11	Alluvial sand deposits
6	Made ground	12	Wells within alluvial sand

Bought by- Jonathan Tingley, Company - Geo-Environmental Services Ltd, on 13 March 2014 Latest version. Not to be distributed/networked. For multi-user access www.bsigroup.com/license © The British Standards Institution 2014

Figure 3 **Example of conceptual model cross section and targeted response zones for VOCs**

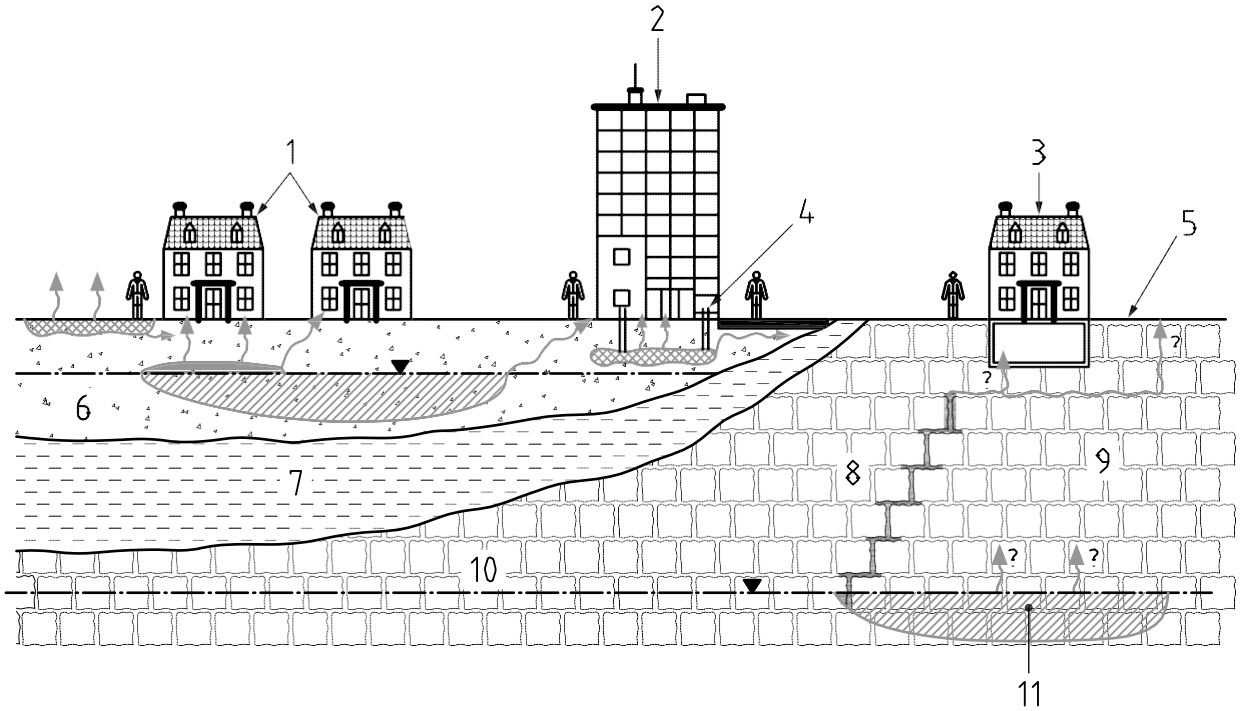

Key

1	Residential property without basement	9	Fractured rock
2	Commercial/high-rise building	10	Deep groundwater table
3	Future residential property with basement	11	Dissolved phase plume
4	Potential preferential pathways		Non-aqueous phase liquid (NAPL) (Light NAPL floats on surface of groundwater and can smear soils as groundwater levels vary; Dense NAPL sinks below ground water until it reaches an impermeable layer)
5	Future hardstanding		
6	Permeable aquifer		
7	Low permeability		Soil source
8	Nonaqueous phase liquid (NAPL) migration		Dissolved phase
			Vapour migration

This figure is based on Figure 4.1 in CIRIA C682 [5].

© The British Standards Institution 2013

Bought by- Jonathan Tingley, Company - Geo-Environmental Services Ltd, on 13 March 2014 Latest version. Not to be distributed/networked. For multi-user access www.bsigroup.com/license © The British Standards Institution 2014

Figure 4 **Key ground gas ingress routes and accumulation areas within buildings**

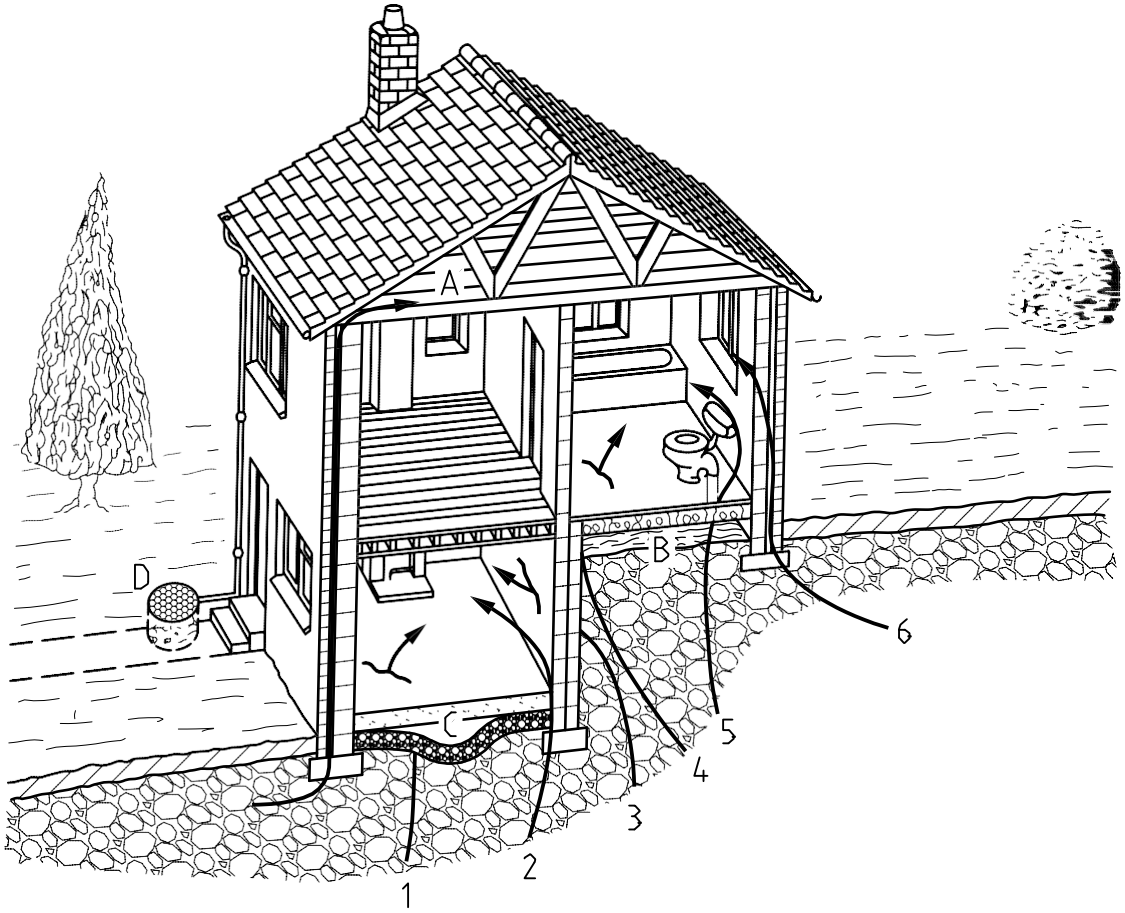

Key

Ingress routes

1 Through cracks and openings in solid concrete ground slabs if present due to shrinkage and curing
2 Through construction joints and openings at wall-foundation interface with ground slab if not sealed
3 Through cracks in walls below ground level
4 Through numerous gaps and openings in suspended block and beam floors or timber floors
5 Through gaps around service pipes and ducts or within the ducts
6 Through cavity walls

Accumulation areas

A Roof voids
B Beneath suspended floors
C Within settlement voids below floor slab
D Drains and soakaways (or similar voids)

This figure is taken from Figure 3 in CIRIA Report R149 [9].

7 Setting objectives

A preliminary investigation should be carried out in accordance with BS 10175 before setting the detailed objective(s) for an investigation for ground gas.

The principal objective of an investigation for ground gases is to provide the information necessary to:

- refine the conceptual model of the site;
- enable the potential risks to be assessed; and
- design appropriate remedial and protective measures, if required.

Objectives may also be to:

- determine possible reasons for plant growth inhibition;
- provide estimates of gas production potential and likely duration of gas production;
- detect underground combustion;
- assess emission of greenhouse gases with respect to climate change and its mitigation.

NOTE 1 This last objective is outside the scope of this standard but the methodologies described might be useful when making the requisite measurements.

*NOTE 2 In order to achieve these objectives, it is usually necessary (see Clause **8**) to monitor:*

- *ground gas composition;*
- *flow rates and pressure (for permanent gases);*
- *concentrations, etc. at different locations on a site;*
- *gas concentrations and generation changes which accommodate pertinent temporal variations and/or other site specific influences which could affect gas concentrations and generation (see **8.6**);*
- *for an appropriate period of time and frequency, taking into account the expected periodicity of any variations and site-specific factors that might affect gas concentrations and generation rates (see **8.5**).*

NOTE 3 Guidance on the selection and design of protective measures for sites where ground gases are present is outside of this standard but can be found in BS 8485 and References [5], [6] and [9]–[13]. They might include:

- *protective measures for buildings and other structures;*
- *site-wide gas control or collection measures;*
- *measures to control migration of ground gas off-site, on to the site, or within the site;*
- *management control systems; and*
- *source reduction or management for VOCs.*

8 Developing the investigation strategy

8.1 General considerations

The investigation strategy should take into account:

- the objectives of the investigation;
- the possibility of zoning the site;
- the conceptual model developed to date;

Bought by- Jonathan Tingley, Company - Geo-Environmental Services Ltd, on 13 March 2014 Latest version. Not to be distributed/networked. For multi-user access www.bsigroup.com/license © The British Standards Institution 2014

- site-specific factors (for example, the site size and topography, physical obstructions, physical permeable pathways);
- current and varying groundwater levels and the direction of groundwater flow;
- the location of buried services, etc.;
- potential heterogeneity of distribution of ground gas;
- the need to avoid creating routes for migration of either gas or (contaminated) groundwater;
- protection of health and safety and the environment;
- temporal effects and the significance of such effects on the results of the investigation;
- locations and extent of proposed buildings and infrastructure;
- off-site considerations;
- how data and other information are to be analysed and presented so as to inform the risk assessment and aid understanding of the data.

NOTE 1 Rising and falling groundwater can cause positive or negative pressures/flows.

Zoning of sites should only be done with caution and should not be based solely on gas monitoring data from earlier investigations.

Development of the investigation strategy should include decisions about:

- phasing of the investigation;
- the location, pattern and number of monitoring points required for the site as a whole or for individual zones (see **8.4** and **8.5**);
- the design of monitoring wells or monitoring points including the response zone(s) (see **8.5**);
- what on-site measurements are to be made and how these are to made (choice of instruments, etc.) (see **9.3, 9.4**, **9.5**, **10.5**, **10.6** and **10.7**);
- the frequency and timing of monitoring and the period over which monitoring is to be carried out (see **8.6**);
- the type and number of samples to be collected for laboratory analysis (**9.6** and **10.8**);
- the methodology by which samples for laboratory analysis should be collected, transported, stored and preserved (see **9.7** and **10.9**);
- the laboratory analyses required;
- any safety measures needed to protect the personnel or the environment (see Clause **5**);
- what quality assurance measures are required (see Clause **12**).

To understand site conditions as well as is practicable and to be able to prepare a sound risk assessment, parameters other than gas monitoring data should be recorded, such as weather conditions, state of ground surface, dewatering nearby excavations, etc. (further details for permanent gases and VOCs are provided in Clause **9** and Clause **10** respectively).

Before on-site measurements are made, the following should be taken into account (**9.3** and **10.5**):

- the need to understand exactly what is to be measured in order to ensure that the correct techniques and equipment are used;

Bought by- Jonathan Tingley, Company - Geo-Environmental Services Ltd, on 13 March 2014 Latest version. Not to be distributed/networked. For multi-user access www.bsigroup.com/license © The British Standards Institution 2014

- the limitations associated with the usage of the equipment chosen;
- whether the very act of setting up and making the measurement might affect the distribution equilibrium between the solid phase and the gas phase and hence affect the measurements taken;
- whether portable or in-situ gas monitoring equipment is sufficient or whether off-site analysis is required.

*NOTE 2 Gas concentration measurements may be taken using portable or in-situ equipment (see **8.2**, **9.1, 10.5** and **10.7**) or samples may be taken for off-site laboratory analysis (see **9.6** and **10.8**). It is usually advisable to collect gas samples, to be submitted for confirmatory analysis in a laboratory, in order to verify the on-site monitoring results.*

NOTE 3 Ground gas samples can usually be taken to be representative of a large zone, although ground gases can migrate in all directions within the ground and they might find a preferential route leading to uneven distributions.

NOTE 4 The composition of ground gas changes as it migrates through the ground, for example, due to differing solubilities, differential adsorption and microbial degradation. For example, methane is at least 50 times less soluble than CO_2 at Standard Temperature and Pressure (STP). In consequence, migrating ground gas can become enriched with methane. A high pH enhances the solubility of the CO_2, temperature increase leads to gases being less soluble, etc.

NOTE 5 Oxidative processes in shallow soils can also result in changes in the relative proportions of methane and carbon dioxide, e.g. methane can be oxidized to carbon dioxide.

When the results of successive monitoring and sampling exercises over a period of time are to be compared, the technique used should be consistent to ensure comparable results including between different operators especially when monitoring from standpipes.

NOTE 6 There might be more than one type of well installation on a site. It is important when assessing changes in the results between monitoring events to be aware of the type of well installation because different well types, including those with different response zones at different depths, might respond differently to changing conditions.

8.2 Preparation of monitoring and sampling plan

Once the investigation strategy has been developed as described in **8.1**, a monitoring and sampling plan should be drawn up. This should set out:

- the objectives;
- what is to be done;
- how it is to be done;
- when it is to be done, including how often and over what period of time; and
- who is to do it.

It should link to the Safety Plan and other documentation that those carrying out the work should be aware of (e.g. the conceptual model).

It should include provisions governing when and how the plan may be deviated from and by whom (e.g. whoever is supervising placement and formation of monitoring installations).

Any changes to the plan should be recorded and reported together with an explanation of why the changes were made, e.g. adverse weather conditions.

Bought by- Jonathan Tingley, Company - Geo-Environmental Services Ltd, on 13 March 2014 Latest version. Not to be distributed/networked. For multi-user access www.bsigroup.com/license © The British Standards Institution 2014

A sampling protocol and checklists to ensure that key activities are not overlooked should be developed for use whenever monitoring is undertaken to ensure that the techniques used by different operators are consistent and to reduce uncertainties in data quality.

NOTE Example protocols for recording site information for permanent gas monitoring and sampling are provided in Annex E. Activities can be omitted or added depending upon the site and the requirements of the investigation.

8.3 Installation options

Ground gas can be monitored and/or sampled using:

- driven probes;
- permanent gas-monitoring wells, ports or sampling probes;
- flux chambers.

Although each technique has its uses, in situations where a detailed, long-term understanding of the site is required, monitoring wells or sampling probes installed in boreholes should be used.

If gas concentration measurements are required at different depths, grouped, nested or multi-level installations should be used. The use of a number of wells (>15 mm diameter) in a single borehole is not recommended because of the difficulty forming effective seals between the response zones.

Selection of the installation(s) to be used should take into account health and safety and potential environmental impacts, and where known, the geology.

NOTE 1 Health and Safety considerations might hinder the use of some techniques. For example, it might be necessary to hand-dig pits to locate services before beginning to drill which can be difficult under some circumstances. Some techniques also preclude the collection of soil samples for examination.

Spot monitoring using spike holes should not be carried out to sample permanent gases but may be carried out to sample VOCs in ground gases provided the limitations associated with their use is understood and accepted (see Table 6).

Surface surveys can be used to measure emissions from cracks in the ground surface, e.g. using flame ionization detectors.

All lubricants used should be such that they will not interfere with the measurements to be made, either whilst the work is in progress or during later monitoring (e.g. it might be preferable to use vegetable rather than mineral oils as lubricants when VOCs are to be monitored). Similarly, care should be taken during storage and handling of lubricants, fuels and hydraulic fluids for drillings rigs, etc. that they do not leak into the ground.

NOTE 2 Measurements of soil-gas atmosphere in spike holes are subject to significant variation depending upon the porosity of the ground, the nature of the soil (e.g. is it likely to smear thereby sealing the hole?) and the weather conditions. Consequently, the results of the measurements from spiking need to be interpreted with caution. A negative result does not necessarily mean the absence of a problem, as gas or volatiles could be present at greater depths. Concentrations can also build up when ground gases are confined, for example in wet ground conditions when the soil pores become blocked at the ground surface. Spike holes for gas monitoring are formed by inserting a solid rod (spike) into the ground and then removing it to leave a hole that can be monitored for gas. Obviously, spike holes can only be formed when the ground is sufficiently cohesive to remain open when the rod is removed, which means that smearing of the sides, reducing permeability, can occur. The depth of the hole will depend on the nature of the ground but is typically only about 0.5 m. Spiking might not penetrate a low-permeability surface layer, e.g. compacted ground or a deliberately placed cap on a landfill site.

Bought by- Jonathan Tingley, Company - Geo-Environmental Services Ltd, on 13 March 2014 Latest version. Not to be distributed/networked. For multi-user access www.bsigroup.com/license © The British Standards Institution 2014

NOTE 3 Options for detecting and measuring permanent gas are listed in Table 1.

NOTE 4 Any invasive activity can affect migration patterns and act as a pathway for the gas.

NOTE 5 Gas monitoring boreholes can also be useful for obtaining hydrogeological, geotechnical and contamination information if this has not been otherwise obtained. It might be possible to obtain the same data from gas monitoring wells designed for sampling of VOCs in ground gas, recognizing that the progression of narrow diameter boreholes is preferable, which might limit the ability to collect additional geoenvironmental samples.

Bought by- Jonathan Tingley, Company - Geo-Environmental Services Ltd, on 13 March 2014 Latest version. Not to be distributed/networked. For multi-user access www.bsigroup.com/license © The British Standards Institution 2014

Bought by- Jonathan Tingley, Company - Geo-Environmental Services Ltd, on 13 March 2014 Latest version. Not to be distributed/networked. For multi-user access www.bsigroup.com/license © The British Standards Institution 2014

Table 1 **Methods of intrusive investigation that can also be used for sampling of permanent gases**

Method	Description	Advantages in relation to sampling of permanent gas	Disadvantages in relation to sampling of permanent gas
Hand auger	Many designs available for different soil types, conditions, and sampling requirements. Preferred forms take a core sample. The auger is used to form a "borehole" of suitable diameter into which a suitably formed sampling pipe can be placed, the annulus filled with granular material to the required depth, and the top of the annulus sealed, generally as described in **9.2.3** and **10.2.3**.	Cheap and easy to use. Deeper than spiking/shallow probes depending on ground conditions. Allows examination of soil profile and collection of samples at pre-set depths. Easier to use in fine or sandy soils, i.e. where there are no obstructions such as stones. Portable and useful for locations with poor access.	Equipment can be physically difficult to operate. Only limited depths can be achieved if obstructions present, e.g. stones. Ease of use very dependent on soil type.

Bought by- Jonathan Tingley, Company - Geo-Environmental Services Ltd, on 13 March 2014 Latest version. Not to be distributed/networked. For multi-user access www.bsigroup.com/license © The British Standards Institution 2014

Table 1 **Methods of intrusive investigation that can also be used for sampling of permanent gases**

Method	Description	Advantages in relation to sampling of permanent gas	Disadvantages in relation to sampling of permanent gas
Driven probes	(1) Driven probe with lost cone. Hollow tube with solid nose cone. Mechanically driven into the ground with a hydraulic or pneumatic hammer. Monitoring pipe installed inside tube. Tube extracted leaving behind nose cone. (2) Driven probe with retractable nose cone. Hollow tube with a solid and retractable nose cone. Mechanically driven into the ground with a hydraulic or pneumatic hammer. Monitoring pipe installed inside tube. Tube partially extracted liberating a sampling chamber above the nose cone. (3) Driven probe with screened tube. Hollow tube with plain part of at least 1 m, and with strained part of at least 50 mm. The tube is mechanically driven into the ground with a hydraulic or pneumatic hammer. Monitoring pipe installed inside the tube to capture the air from the strained part of the tube.	Minimal ground disturbance. Easily portable thus access problems unlikely. Can reach a depth of 10 m or sometimes more. Allows soil-gas profile through the ground to be determined.	Will not penetrate obstructions. Can cause smearing in clayey soils which restricts gas ingress into the probe hole, although this is minimized by the use of an oversize nose cone.

© The British Standards Institution 2013

Bought by- Jonathan Tingley, Company - Geo-Environmental Services Ltd, on 13 March 2014 Latest version. Not to be distributed/networked. For multi-user access www.bsigroup.com/license © The British Standards Institution 2014

Table 1 **Methods of intrusive investigation that can also be used for sampling of permanent gases**

Method	Description	Advantages in relation to sampling of permanent gas	Disadvantages in relation to sampling of permanent gas
Boreholes (without flushing device)			
(1) Use of cable percussion rigs	Cased borehole is sunk by cable percussion techniques. Consists of a tripod derrick with a winch driven by a diesel engine. The cutting tool, which forms the borehole by gravity percussion, is attached to the winch via a steel cable. Steel casing can be used to support the borehole. Perforated standpipe is installed in the borehole. The pipe is surrounded with gravel, and the casing withdrawn.	Can install several standpipes in one borehole to measure at different depths (i.e. a nested installation). Can take samples of strata at different depths during drilling. Allows groundwater to be monitored. Allows soil-gas profile through the ground to be determined. Allows greater sampling depth than with hand augers. Can penetrate most soil types. Minimal surface disturbance.	Might have access problems. Brings contaminated material to the surface. More costly and time-consuming than hand augers. Waste from boreholes requires disposal and can cause surface contamination where groundwater or liquid contamination is present. Potential for contamination of underlying aquifers and groundwater flow between strata within an aquifer unless properly cased.

Bought by- Jonathan Tingley, Company - Geo-Environmental Services Ltd, on 13 March 2014 Latest version. Not to be distributed/networked. For multi-user access www.bsigroup.com/license © The British Standards Institution 2014

Table 1 **Methods of intrusive investigation that can also be used for sampling of permanent gases**

Method	Description	Advantages in relation to sampling of permanent gas	Disadvantages in relation to sampling of permanent gas
(2) Use of percussive window and windowless drilling rigs	Borehole is sunk using percussive windowless or window sampling technique. Cylindrical steel tubes (often with an internal plastic sleeve) are driven into the ground by a percussive hammer. Hammers are usually mounted on small wheeled or tracked rigs, but can also be hand-portable. (Some dynamic sampling rigs are also capable of rotary drilling.) A perforated standpipe is installed and surrounded with gravel. If a casing has been used, this is then withdrawn.	Minimal disturbance to ground. Substantially faster than cable percussion. Very compact rigs are available which can be used inside buildings or where space is limited. Portable equipment available for use in poor and limited access areas. Allows soil-gas profile through the ground to be determined. Less potential for adverse effects on health and safety and above-ground environment than boreholes. Can be used either for shallow sampling or at depths down to 10 m with appropriately sized equipment.	Care is needed to avoid enabling contamination of an underlying aquifer. Depending on the weight of the hammer, might be unable to penetrate some obstructions (except where the drilling rig has a dual percussive and rotary capability). Can cause smearing of hole walls in some strata. Causes compression of some strata, e.g. peat. Holes, if not cased, could open up migration pathways. Depth of penetration might be more limited than for other types of drilling equipment, especially when small rigs are used, but heavier rigs can reach 10 m or more, depending on the strata to be penetrated. A percussive hammer is noisy. Could be unsuitable in certain locations where noise is an issue. Casing can be inserted during drilling where the rig has adequate power and a removal system.

© The British Standards Institution 2013

Bought by- Jonathan Tingley, Company - Geo-Environmental Services Ltd, on 13 March 2014 Latest version. Not to be distributed/networked. For multi-user access www.bsigroup.com/license © The British Standards Institution 2014

Table 1 **Methods of intrusive investigation that can also be used for sampling of permanent gases**

Method	Description	Advantages in relation to sampling of permanent gas	Disadvantages in relation to sampling of permanent gas
(3) Borehole formed using continuous flight auger	Borehole formed using continuous flight auger with hollow central shaft. Withdrawing centre bit and plug allows access down the stem for sampling. A perforated standpipe is installed and surrounded with gravel. If a casing has been used, this is then withdrawn.	Usually more rapid than cable percussion. Great depths attainable. Minimal disturbance to ground. Can install several standpipes in one borehole to measure at different depths (i.e. a nested installation). Allows soil-gas profile through the ground to be determined.	Can have access problems. Brings contaminated material to the surface. Care is needed to avoid enabling contamination of an underlying aquifer. Less amenable to visual inspection of strata than cable percussion boreholes. Less suitable for deeper boreholes than cable percussion unless large rigs used.
Boreholes (with flushing device)	Similar to borehole without flushing device, but the hole is drilled by a rotary tool and flushed with air or water or other fluid to aid rock penetration.	As for "boreholes without flushing device" but: • quicker than cable percussion; • penetrates and samples all soil types and rock; • relatively mobile rig; • permits recovery of rock cores for description of rock and jointing/bedding. This is often necessary for gas migration assessments.	As for "boreholes without flushing device" but: • not intrinsically safe, sparks might be a hazard on a gassing site; • water flush can spread contamination; • air flush can cause migration of ground gas. Care is needed to avoid enabling contamination of an underlying aquifer. Does not allow determination of soil-gas profile due to the effects of the flush. Flush requires containment and disposal.

Bought by- Jonathan Tingley, Company - Geo-Environmental Services Ltd, on 13 March 2014 Latest version. Not to be distributed/networked. For multi-user access www.bsigroup.com/license © The British Standards Institution 2014

Table 1 **Methods of intrusive investigation that can also be used for sampling of permanent gases**

Method	Description	Advantages in relation to sampling of permanent gas	Disadvantages in relation to sampling of permanent gas
Sonic drilling	Two types of rig are generally available: sonic and rota-sonic. Both use high-frequency energy which shears and displaces the soil particles. Rota-sonic combines rotary and sonic drilling capabilities in the same rig.	Permits at or near 100% core recovery in the majority of ground conditions. Faster drilling progress is possible where conditions permit compared with cable percussion boreholes. Permits recovery of intact samples. The use of drilling flush is not always necessary. Rota-sonic drilling can penetrate all soil types and also hard rock, concrete and other obstructions (sonic drilling can be subject to refusal).	Some rigs do not have the ability to insert casing, which could result in the creation of migration pathways. Dry drilling (without flush) can result in heat being generated by the drill rod, which causes loss of volatiles. This can be reduced by changing the drilling process. Sonic drilling in weak rock can result in drilling-induced fracturing of the intact samples, which could be of concern if an integrated investigation is required. Difficulties in measuring water strikes, particularly where water is used during drilling. Drilling flush requires containment and disposal. Some rigs have inbuilt waste water management systems.
Sub-slab	Drilling a hole in the hardstanding or foundation slab through which the sampling port can be installed.	Permits the atmosphere immediately below the slab to be monitored (e.g. in granular fill that permits accumulation and migration of gas). Cheap and easy to form, possibly using hand-held drill, so numerous holes can be inserted with minimal disturbance in occupied buildings or facilities.	Damages any underlying damp proof or gas control membrane (this applies to all through slab exploration).

NOTE Dry drilling (without flush) can result in heat being generated by the drill rod, which causes loss of volatiles. This could also increase the risk of explosion where methane is present. This can be reduced by changing the drilling process.

© The British Standards Institution 2013

8.4 Location of monitoring installations

The locations of monitoring wells and other in-ground installations should take into account:

- the investigation objectives;
- the conceptual model, including:
  - geology and hydrogeology;
  - the location and number of potential on- and off-site sources;
  - migration pathways such as more permeable zones of soil or rock and close to service ducts and trenches;
  - permeability of the ground (which affects the zone of influence of the wells);
  - locations of underground services, etc.;
  - the locations of existing buildings (including location, form and depth of foundations) and other structures;
  - the locations of proposed buildings and services;
  - the extent of proposed excavations and other earthworks;
- health and safety;
- accessibility;
- the sensitivity of the (proposed) end use; and
- the need to assess potential off-site migration.

Each well should be designed after consideration of the field records of that hole.

In areas where chemical contamination is thought to be severe, the drilling of boreholes can produce preferential pathways for liquid contaminants or contaminated groundwater and as a result, information should be sought on specialist drilling precautions.

Monitoring installations locations may be targeted in locations such as the following:

- a particular area of a site or stratum that is suspected of generating permanent gases;
- a particular area of a site or stratum where it is suspected that VOCs might be present;
- zones of permeable geology that could provide a migration pathway from a potential ground gas source;
- at the closest point to an existing, adjacent or proposed potential receptor such as housing;
- in areas of low risk, to enable collection of background concentration data;
- at locations and depths to assess attenuation/emission potential through overlying lower permeability strata;
- where there is a potential off-site source, close to the site boundary, and possibly off-site.

The spacing of wells located on the site boundary should take into account the proximity of the potential source and the nature of the ground through which the gas might migrate (e.g. the extent of fissuring, if any). Service trenches might provide a pathway for gas migration and these should therefore be separately monitored.

Bought by- Jonathan Tingley, Company - Geo-Environmental Services Ltd, on 13 March 2014 Latest version. Not to be distributed/networked. For multi-user access www.bsigroup.com/license © The British Standards Institution 2014

NOTE 1 It is often useful to place wells at different distances on a section along a migration pathway to observe variations in gas concentrations and flows as distance from the source increases. This is often referred to as transect monitoring.

NOTE 2 It might be necessary to locate monitoring installations where there is existing low-permeability ground cover such as a foundation or floor slab. Consideration can also be given to the location of monitoring installations close to the edges of such slabs (i.e. to form near-slab installations) to capture gas emanating from below the slab but forced to migrate laterally by the slab.

NOTE 3 Table 7.1 of Waste Management Paper 27 [21] suggests a spacing of 5 m to 20 m on the boundary in fissured strata when development adjoins a landfill site, depending on the amount of fissuring.

Monitoring installation locations may also be non-targeted, for example, where:

- potential permanent-gas generating soils are present across the whole site (such as a site underlain by alluvium);
- it is considered that VOCs might be present across a wide area of a site with little prior information as to where they might be concentrated;
- the conceptual model is poorly developed so that there is only weak evidence for targeting the investigation (in this case, consideration should be given to installing gas wells in later phases of the overall site investigation once the sources and migration pathways are understood more clearly).

Subsequent monitoring wells should be positioned on the basis of the information obtained from the initial site investigation or gas well installations.

*NOTE 4 Examples of monitoring well construction for permanent gases and for VOCs in ground gas are given in Clause **9** and Clause **10** respectively.*

NOTE 5 Where monitoring locations for groundwater and permanent gases are coincident, it is not always possible to install a combined monitoring well. In some cases, it is undesirable to monitor gas in groundwater monitoring wells, for example, where very deep groundwater wells are installed with a small response length in a deep aquifer. Such a situation can cause unrepresentative flow rates and concentrations to be recorded. Unrepresentative flows and concentrations can be recorded because of partitioning of gas from groundwater into the headspace and because the deep well acts as a chimney to promote gas flow which would not occur through the soil if the well was not present.

NOTE 6 It is not generally advisable to install a combined groundwater and ground gas monitoring well where ground gas samples are intended to be sampled for VOCs and the results used in a quantitative risk evaluation. Data on VOCs obtained from such wells is best considered as mainly qualitative, e.g. indicating what compounds are present and/or relative concentrations.

8.5 Response zones (monitoring depths)

The selection of response zones should take into account:

- the objectives of the investigation;
- the conceptual model;
- geology and hydrogeology;
- the possible influence of underground mine workings and/or services;
- the potential for migration;
- likely depth of emissions.

Bought by- Jonathan Tingley, Company - Geo-Environmental Services Ltd, on 13 March 2014 Latest version. Not to be distributed/networked. For multi-user access www.bsigroup.com/license © The British Standards Institution 2014

Multiple wells formed to different depths (grouped installation) or nested wells (nested installation) may be used to monitor gas concentrations at different depths, though the former provide more reliable data if nested wells are not installed correctly. Where nested wells are used, the installation should be closely supervised to ensure gas-tight seals are achieved within the borehole. It is preferable to have a minimum of 2 m long bentonite seals that are either tremied into place, or if pellets are used, that are well hydrated in the hole and compacted down. Response zones should be relatively short.

NOTE 1 Information on concentrations at different depths is useful as it allows for a better understanding of the propensity for the gas to migrate.

NOTE 2 Monitoring the ground gas profile during the formation of boreholes can provide useful information on the vertical distribution of gas components and concentrations. Monitoring during installation can also give important safety information (e.g. the potential for explosive atmospheres to be present).

NOTE 3 Where the response zone extends below the water table, gas present in the groundwater will tend to produce an equilibrium concentration in the well headspace. This applies to both permanent gases and VOCs but can be particularly misleading in the latter case. Testing for dissolved gases in groundwater is useful to help interpret monitoring results in such a situation. Similarly, any VOCs in a floating non-aqueous hydrocarbon layer will produce an equilibrium concentration in the well headspace.

NOTE 4 Where nested wells are installed, the range of monitoring techniques might be limited to portable devices. If in-situ high-frequency or continuous monitoring is required, additional care is necessary in the design and construction of headworks.

8.6 Timing and frequency of monitoring of permanent gases

Monitoring should be carried out starting from shortly after installation of the monitoring equipment for a period commensurate with the objectives of the investigation.

Monitoring should be sufficient to allow prediction of worst case conditions. Justification should be provided for the monitoring period and frequency that is adopted. This should be based on the preliminary conceptual model. Factors that should be taken into account in the decision process include periods of rising, falling and stable barometric pressure and the need to be able to predict the nature and timing of worst case conditions (see Note 3). A guide to the decision process for permanent gases is provided in **8.7** (see also Annex F).

Gas monitoring does not necessarily need to be carried out under worst case conditions. It does not necessarily need to be at low or falling atmospheric pressure, but rather should be continued until it is unlikely that additional data will change the interpretation of the data, the outcome of the risk assessment and proposed remedial actions. This requires continued assessment of data as the monitoring progresses. One of the main considerations is to assess whether gas flow rates or concentrations could possibly increase and thereby affect the risk assessment and hence the choice of protective measures.

High-frequency monitoring (see Note 4) might be especially useful in assessing gas emissions around mineshafts to more recently closed workings or around landfill sites where large volumes of gas can be emitted through cracks in the surrounding ground in response to atmospheric pressure or other variations. The risk of this occurring and the need for high-frequency monitoring can be assessed using the conceptual model and depends on the management of the landfill, treatment of the shaft and the geology. On lower risk sites, high-frequency monitoring might be useful in some cases where spot monitoring indicates a higher gas regime than expected from the conceptual model, if there are time constraints to conduct longer monitoring programmes, or if surety is needed for sensitive receptors.

Bought by- Jonathan Tingley, Company - Geo-Environmental Services Ltd, on 13 March 2014 Latest version. Not to be distributed/networked. For multi-user access www.bsigroup.com/license © The British Standards Institution 2014

NOTE 1 Gas emission rates are likely to be at their highest when there are sharp falls in atmospheric pressure. Where prolonged sealing events occur (e.g. surface freezing or water logging), ground gas can often become trapped, which can result in differing gas emission points or might cause an increase in gas pressure which when removed might cause rapid gas release.

NOTE 2 The generation of carbon dioxide, methane and other ground gases is not affected by atmospheric pressure. However, their migration, and hence concentrations at particular locations away from the source, might be. For example, within fissures connecting to the atmosphere and in near-surface strata subject to "atmospheric pumping", i.e. air being forced into the ground as atmospheric pressure increases or drawn from the ground as atmospheric pressure decreases. High wind speeds might also cause air to be drawn from the ground. The depth over which atmospheric pumping has an effect depends on the permeability of the surface, the permeability of near-surface strata and whether fissures or other connections to the atmosphere are present. If the well is not leaking significant air exchange between the well and the soil will not take place in homogeneous ground with hydraulic conductivity less than about 1 x 10^{-6}m/s. In homogeneous ground conditions the maximum depth over which atmospheric pumping might have an effect is often considered to be approximately 1 m but effects at depths of up to 5 m have been recorded, and can feasibly occur at any depth where more permeable strata are confined below impermeable layers and are connected to the atmosphere.

If gas concentrations in a ground gas monitoring well are responsive to changes in atmospheric pressure it needs to be in continuity with the atmosphere. This could be for a number of reasons. It could be because of poor well construction, i.e. there is a leak around the cap/bung or there is a leak down the side of the installation. It could also be because the well is in continuity with the surrounding soil which is affected by atmospheric pumping. At times of high atmospheric pressure gas concentrations might be lower because air is forced into the well diluting the methane present, for example. There is often a misconception that this is not a valid result and is lower than it should be. This is incorrect and it is a valid result if it reflects the dilution that is also occurring in the surrounding soil (i.e. the well is not leaking).

There is also a misconception that under these circumstances flow rates and pressure measurements will also be unreliable. This is not correct unless the well is leaking, because the flow rates might represent what is happening in the surrounding ground. If the well is leaking sufficiently to have an impact on the conclusions drawn from the monitoring then making measurements at times of low atmospheric pressure and falling atmospheric pressure might help to overcome the deficiencies of a poorly constructed well. This needs to be based on an assessment of the results and the site conceptual model. There are often circumstances in which it is desirable to measures gas concentrations within the zone affected by atmospheric pumping as this can have a significant influence on the gas risk assessment.

NOTE 3 Suggested monitoring periods and frequency of monitoring for permanent gases can be found in CIRIA Report C665 [4]. The suggested monitoring periods and frequency of monitoring are dependent on the generation potential of the ground gas source and the sensitivity of the development. The overall philosophy that is adopted in determining the periods and frequency of monitoring is based on:

- *likelihood of gas being present in large volumes in the ground;*
- *nature of the gas source – the lower the gas generation potential, the fewer readings are usually required;*
- *potential migration pathways;*
- *the use of the data (trying to prove the absence of gas migration from off-site might require more readings than proving it is happening);*
- *the impact of collecting extra data on any risk assessment – will it make any difference or increase confidence? If not, extra data is not required;*

Bought by- Jonathan Tingley, Company - Geo-Environmental Services Ltd, on 13 March 2014 Latest version. Not to be distributed/networked. For multi-user access www.bsigroup.com/license © The British Standards Institution 2014

- *sensitivity of development – the more sensitive the development, the more data are required;*
- *the level of gas protection that is present or to be provided. (Will extra data increase the requirements? If it is not likely to do so, the extra data are not necessary);*
- *is the gas source to be removed during development? If so, gas monitoring might not be necessary.*

NOTE 4 Where a more comprehensive characterization of a ground gas regime is required, for example, to improve a risk assessment, the collection of data at a higher frequency may be considered. This type of monitoring is not necessary on all sites. It can be achieved in a number of ways using either well head or in-hole monitors programmed to sample at regular intervals. This can enable valuable information to be recorded for later downloading and analysis or for the information to be sent by telemetry for real-time assessment. The benefit of higher frequency data should be considered against the period of time over which it is collected. A longer period of individual results might span a greater range of atmospheric, climatic and groundwater conditions and give greater confidence than a short period of higher frequency data that only covers limited variations in conditions in limited wells [(see Figure 5a)]. On the other hand, where the conceptual model suggests that the gas regime might fluctuate due to, for example tidal influences, frequent monitoring over a period of only a day might be helpful. High-frequency monitoring using hand held meters over a few days at hourly intervals during the day can help to assess the volume of gas in a well headspace. One of the advantages with high-frequency/continuous monitoring is its ability to log concentrations with changes in environmental variables including atmospheric and borehole pressure, water level and temperature, to provide insights into the gas migration drivers and correlations. Other parameters can also be monitored and logged where required to develop the conceptual model further. Figure 5b) shows the variation of methane with atmospheric pressure in a well. If considered necessary, high-frequency monitoring can be carried out for a number of shorter periods of, for example, six weeks at three or four different times of year, to gather more detailed information on responses to environmental factors in different seasons.

NOTE 5 In order to assess the level of confidence that can be placed in short periods of high-frequency data versus longer periods of spot data, it is useful to plot all the data on a single graph. This also allows a comparison of both data sets to help make decision about whether further data are required [(see Figure 5a)]. The lines between the individual periodic results are to help visual interpretation of the graphs and do not imply that a straight line relationship occurs in reality.

Bought by- Jonathan Tingley, Company - Geo-Environmental Services Ltd, on 13 March 2014 Latest version. Not to be distributed/networked. For multi-user access www.bsigroup.com/license © The British Standards Institution 2014

Bought by- Jonathan Tingley, Company - Geo-Environmental Services Ltd, on 13 March 2014 Latest version. Not to be distributed/networked. For multi-user access www.bsigroup.com/license © The British Standards Institution 2014

Figure 5 **High-frequency data**

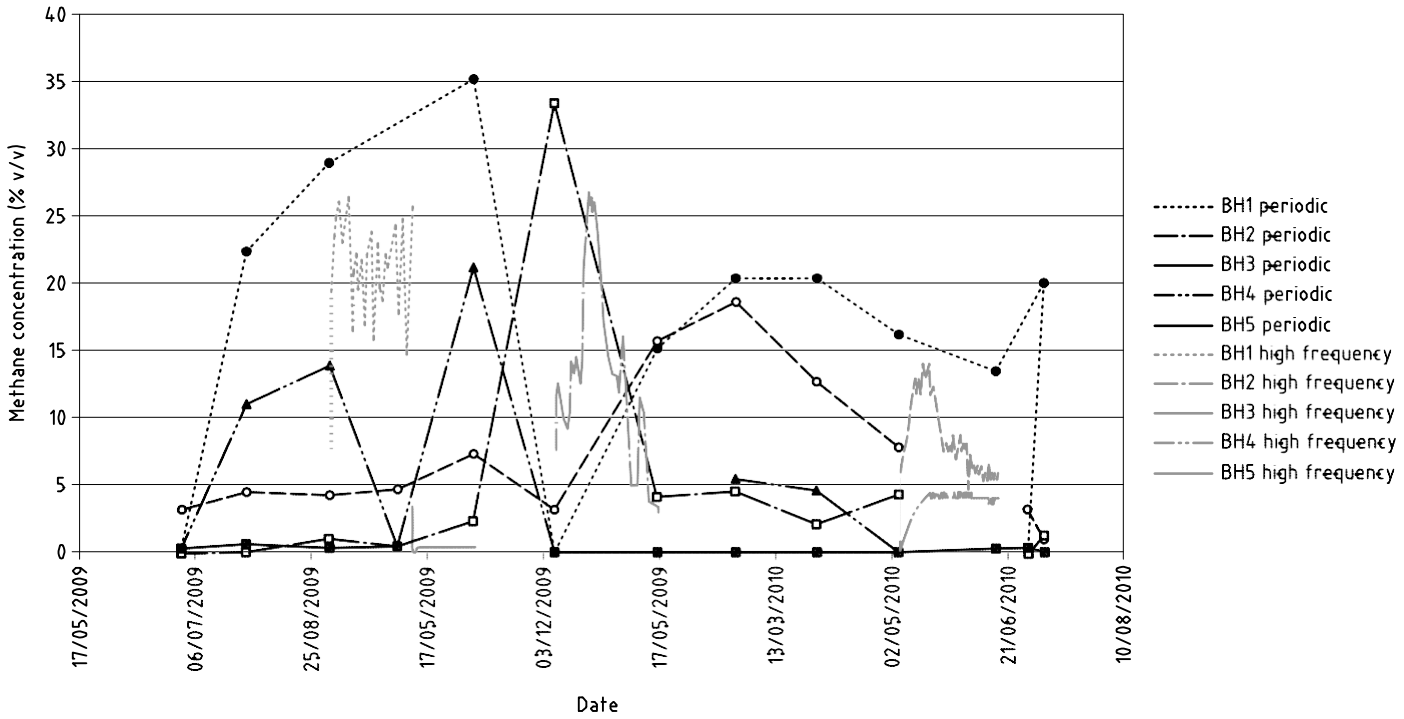

a) Comparison of spot monitoring with high-frequency data

© The British Standards Institution 2013

Bought by- Jonathan Tingley, Company - Geo-Environmental Services Ltd, on 13 March 2014 Latest version. Not to be distributed/networked. For multi-user access www.bsigroup.com/license © The British Standards Institution 2014

Figure 5 **High-frequency data**

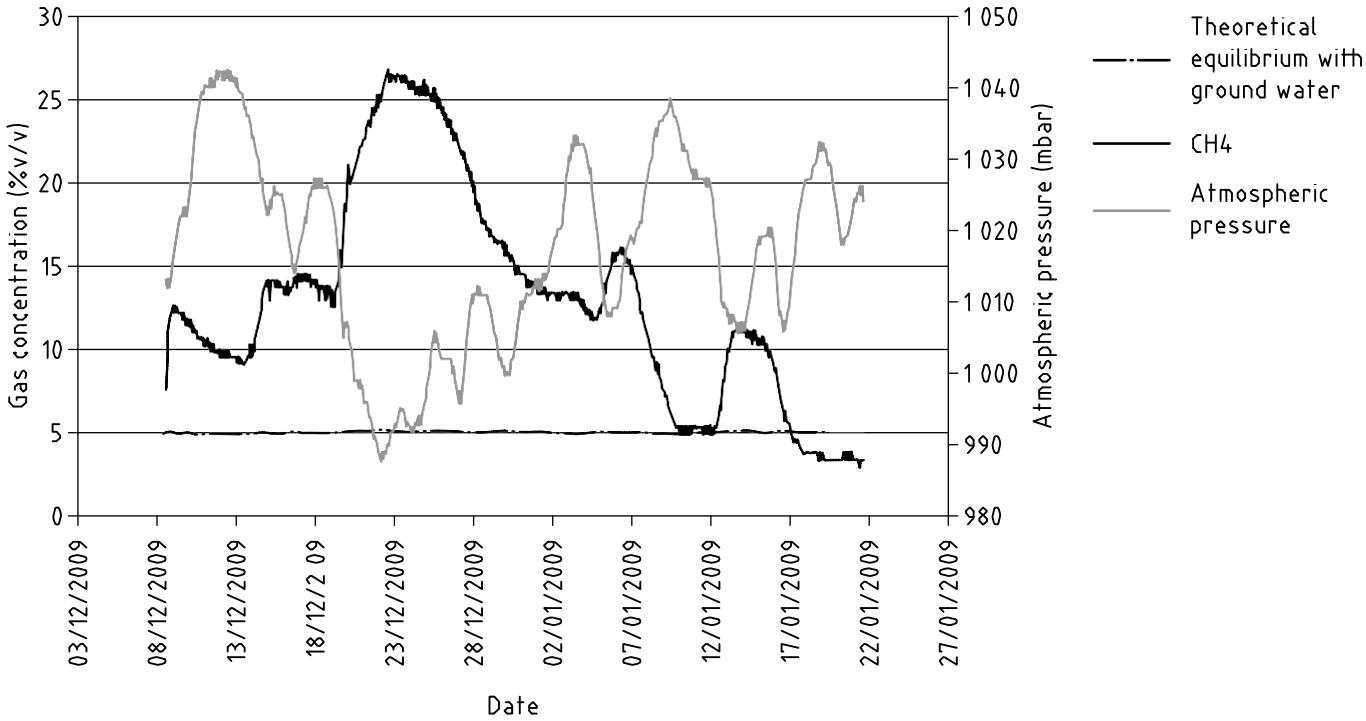

b) High-frequency data indicating trends in gas concentrations in response to external influences

8.7 Deciding the appropriate level of gas monitoring of permanent gases

The decision matrix in Figure 6 provides an aid in deciding the appropriate level of gas monitoring on any particular site. The extent of gas monitoring that is required is based on the generation potential of the source, i.e. what is the risk that large volumes of gas can be generated and can credibly migrate to pose a credible hazard to the identified receptors?

If the source of gas is off-site and gas migration is being assessed, increasing the periods of monitoring to cover the range of critical influences indicated by the conceptual model should be considered, if such monitoring is likely to influence the outcome of the risk assessment.

Examples of the decisions made following these principles are provided in Annex F.

NOTE 1 When considering Figure 6, it might be appropriate to take into account the sensitivity of the receptor, the existence of site-specific migration pathways and mechanisms that could affect migration, such as groundwater level movements.

NOTE 2 The advice in Note 1 and in Figure 6 need to be interpreted with care. There could be occasions when "low potential" sites require more monitoring than those with a higher gas generation potential. On a site where there are high gas concentrations and/or flow rates this can become apparent following a single round of monitoring and further monitoring is unlikely to alter the assessment of potential risks. On the other hand, some sites with low gas concentrations and/or flow rates are more susceptible to changes in atmospheric pressure, etc. and therefore require a longer period of monitoring in order to assess the potential risks with confidence.

Figure 6 **Decision matrix for initial monitoring**

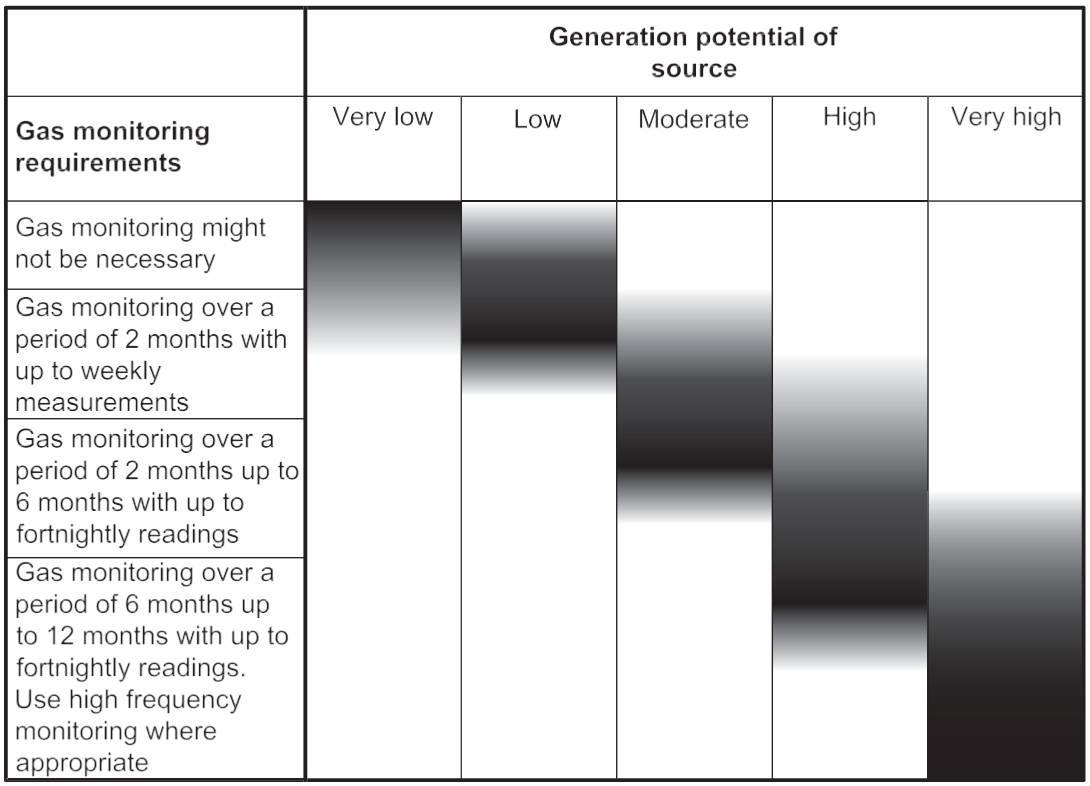

NOTE The darker the section on the matrix, the more likely it is that monitoring is needed.

Bought by- Jonathan Tingley, Company - Geo-Environmental Services Ltd, on 13 March 2014 Latest version. Not to be distributed/networked. For multi-user access www.bsigroup.com/license © The British Standards Institution 2014

Figure 6 **Decision matrix for initial monitoring**

Very low	• Natural carbonate soil and strata, e.g. chalk and limestone. • Natural soil strata with a low degradable organic content, e.g. alluvium, peat. • In-filled pond less than 15 m diameter, in-filled before 1930s to 1940s. • Made ground with low degradable organic content (e.g. up to 5% organic material such as pieces of wood, pieces of paper, rags, etc. with a high proportion of ash and no food or other easily degradable waste). • Mine workings shallow or shaft (where there is clear evidence that they are flooded). (Gas in coal is historically generated and is trapped or adsorbed so the actual current generation rate is very low but it accumulates in workings and large volumes can be emitted very quickly.) • Inert landfill sites. (Lack of regulation in the past means that most sites are never entirely inert – they can include timber, plasterboard and even domestic refuse and consequently care is needed when assessing such sites. They might require a higher risk classification.)
Low	• Natural soil strata with a high degradable organic content (DOC). • Made ground with total organic carbon (TOC) up to 6% (e.g. dock silt. No food or other easily degradable waste). • Foundry sand (includes phenolic binders, rags and wood that decay, albeit at low rates). • Landfill 1945 to mid 1960s (see also "moderate"). Higher TOCs might not always indicate high degradability. For example, coke breeze can contain up to 51% TOC but only 4% DOC. In this case, the assessor should estimate what proportion of the TOC is degradable.
Moder-ate	• Sewage sludge. • Mine workings – unflooded, more than 50 years since last worked (gas is liberated from coal when mine workings are excavated; this continues for up to about 50 years). • Landfill 1945 to mid 1960s (this could also be "low" or, if disturbed, "high").
High	• Landfill mid 1960s to early 1990s. • Mine workings – unflooded – less than 50 years since last worked.
Very high	• Municipal landfill sites. • Landfill early 1990s onwards.

8.8 Timing and frequency of monitoring of VOCs

The monitoring period and frequency of monitoring for VOCs in ground gases should be developed on a site-specific basis from the conceptual site model and investigation data quality objectives.

8.9 Personnel

8.9.1 General

Field work is the foundation of all ground gas risk assessment. In order to obtain high quality data, it is important that personnel doing field work are appropriately knowledgeable, qualified, trained and experienced.

Bought by- Jonathan Tingley, Company - Geo-Environmental Services Ltd, on 13 March 2014 Latest version. Not to be distributed/networked. For multi-user access www.bsigroup.com/license © The British Standards Institution 2014

There are various roles that need to be performed by one or a number of persons, including project leader, field manager, field investigator and skilled operatives (e.g. drillers). Tasks to be carried out include direction, planning and execution, supervision in the field, sampling and measurement, formation of exploratory holes and logging of excavations and boreholes, etc. The prescription of the qualifications, etc. required by those performing these roles is outside the scope of this standard, except for lead drillers, support operative drillers and the operators of excavating plant where the provisions of BS 5930 apply.

NOTE 1 Reference to BS 5930 and related geotechnical standards (e.g. BS 22475-2) can be useful by analogy regarding the roles to be performed and appropriate levels of qualification, etc.

NOTE 2 Those performing these various roles could work for the client, a consultant or a contractor.

8.9.2 Sampling personnel

The experience of sampling personnel should reflect the requirements of the sampling programme and investigation requirements. Sampling personnel should always be aware of what the samples are intended for and have experience and knowledge of:

a) the types and behaviour of contaminants generally associated with the site's previous use(s);

b) safety and environmental precautions;

c) commonly applied techniques and tools (including the advantages and disadvantages); and

d) field testing (if relevant).

NOTE Sampling personnel are responsible for the proper use of tools (including cleaning between sampling locations) and recording relevant observations made during sampling (e.g. odours or discolouration).

9 Field work – permanent gases

9.1 General considerations

Detection and determination of the concentration of vapours and gases may be undertaken by:

- monitoring in the field (see **9.3**, **9.4** and **9.5**); and
- sampling the ground gas and subsequent analysis in the laboratory or field (see **9.6** and **9.7**).

To understand site conditions as well as is practicable and to be able to prepare a robust risk assessment, a range of information relating to the monitoring well and site conditions should be recorded (**9.4**) and reported (Clause **11**), in addition to measured parameters such as gas concentrations, borehole flow rates and monitoring well.

Any instrument used in the field should be calibrated and achieve appropriate limits of detection. In addition, the limitations and potential interferences should be clearly understood (see **9.3**).

Measurements of hydrogen sulfide and mercaptans, etc. should be carried out in the field due to the difficulty of providing an unaltered sample for laboratory analysis (this does not preclude the use of laboratory analysis for hydrogen sulfide providing any discrepancy with field results is carefully investigated).

Bought by- Jonathan Tingley, Company - Geo-Environmental Services Ltd, on 13 March 2014 Latest version. Not to be distributed/networked. For multi-user access www.bsigroup.com/license © The British Standards Institution 2014

NOTE 1 Mercaptans, also known as thiols, are strongly smelling volatile organosulfur compounds, in which the OH group in alcohols is replaced by the SH group, e.g. C2H5SH (ethanthiol or ethyl mercaptan). In principle, they can be measured on site using a portable gas chromatograph. In addition, they can be collected for subsequent laboratory analysis, provided any collection device (e.g. a steel adsorption tube) has been treated to prevent the thiol reacting with the steel. The smell of mercaptans varies but is often described as garlic, cabbage or skunk. They can be detected by humans at concentrations as low as 10 ppb. They are added to "natural gas" as an odorant.

NOTE 2 Whilst hydrogen sulfide is probably best determined on-site, it can be collected for laboratory analysis in appropriately treated steel adsorption tubes or containers. If the steel is untreated, the hydrogen sulfide will react with it and degrade.

9.2 Construction of gas monitoring wells

9.2.1 General

The installation of ground gas monitoring wells should be carried out in boreholes or driven boreholes (see Clause **8**). Installation should not be carried out in a trial pit with subsequent backfilling due to the disturbance and aeration of the ground and the uncertainty of the period necessary for original ground conditions to re-establish before monitoring can continue.

The strata encountered should be recorded in accordance with BS EN ISO 14688-1, BS EN ISO 14688-2 and BS EN ISO 14689-1 during the installation of wells when the selected method permits this to be done. The descriptions of the strata encountered should include reference to the presence of any biodegradable material or other material that might give rise to gas, including the proportion of such material when this is practicable. If the method of installation does not allow the strata to be recorded, the ground conditions around the response zone should be inferred from other nearby investigation points, such as other boreholes.

NOTE 1 It might sometimes be appropriate to commission total organic carbon (TOC) and other laboratory tests on soil samples to provide information from which the potential for gas generation over time can be assessed.

Gas monitoring wells should have response zones that intercept gas in a single source or pathway. The response zones should not normally span across different sources or pathways.

NOTE 2 An example of a typical well for monitoring permanent gases is provided in Figure 7.

Spike holes should not be used to monitor for the presence of permanent gases (see **8.3**, Note 2).

9.2.2 Borehole formation

Guidance on the formation of boreholes can be found in BS 5930 and BS 10175.

During drilling of the borehole, the borehole atmosphere should be monitored with on-site equipment at 1 m intervals.

9.2.3 Installation of gas-monitoring standpipe in a borehole

The well should reach a pre-determined depth as required by the specific site investigation. Where the investigation is related to migration of gas from a landfill, monitoring wells outside the landfill should intercept all potential migration pathways. In other cases, wells should intercept all potential sources of gas that could affect the risk assessment. These should be established from the conceptual site model.

Bought by- Jonathan Tingley, Company - Geo-Environmental Services Ltd, on 13 March 2014 Latest version. Not to be distributed/networked. For multi-user access www.bsigroup.com/license © The British Standards Institution 2014

Care should be taken during installation not to penetrate in an uncontrolled way any liner or natural low-permeability layer that is preventing contaminated groundwater or leachate from reaching underlying more sensitive groundwater.

When perched water is present (i.e. groundwater is present above a generally near-surface low-permeability layer), care should be taken to prevent downward migration of the perched water. A response zone should be located beneath the low permeability layer. One might also be required above the low-permeability layer depending on the thickness and nature of the overlying materials.

Dissolved gas in groundwater can influence the gas concentrations present in monitoring wells. Where practical and reasonable, the response zone for permanent gas monitoring wells should be located in an unsaturated zone. (Such a zone might exist below perched water tables and could form a migration pathway.) This is subject to intercepting all potential gas sources. For example, peat layers in alluvium might be below the groundwater table but pockets of gas can be trapped within the peat. In this case, it would be desirable for the well to penetrate below the groundwater. If there is doubt, it is useful to install wells with response zones above and below the water table.

A typical well is shown in Figure 7.

A pre-slotted pipe should be installed to the required depth within the borehole. The pipe material/thickness should provide sufficient strength and chemical resistance for the proposed installation (high density polyethylene [HDPE] and polyvinyl chloride [PVC] are normally used). The pipe should be un-slotted (plain) within 1 m of the ground surface except where ground conditions or the objectives of the monitoring exercise require otherwise (e.g. 0.5 m if an unusually shallow response is required or the groundwater table particularly close to the surface, or >1.0 m when the intention is only to collect gas from deeper depths such as below a layer of made ground). The pipe should comprise sections which can be fitted together with screw threads, as this avoids the need for organic compounds and solvents to seal the lengths together. The slotted section should be in the required response zone (see **8.5**).

If the well does not extend to the base of the borehole, the backfill below the base of the well should be well compacted and there should be a minimum of a 2 m long bentonite or cement bentonite grout or pellet seal immediately below the monitoring well (see Figure 7).

Bought by- Jonathan Tingley, Company - Geo-Environmental Services Ltd, on 13 March 2014 Latest version. Not to be distributed/networked. For multi-user access www.bsigroup.com/license © The British Standards Institution 2014

Figure 7 **Typical well design**

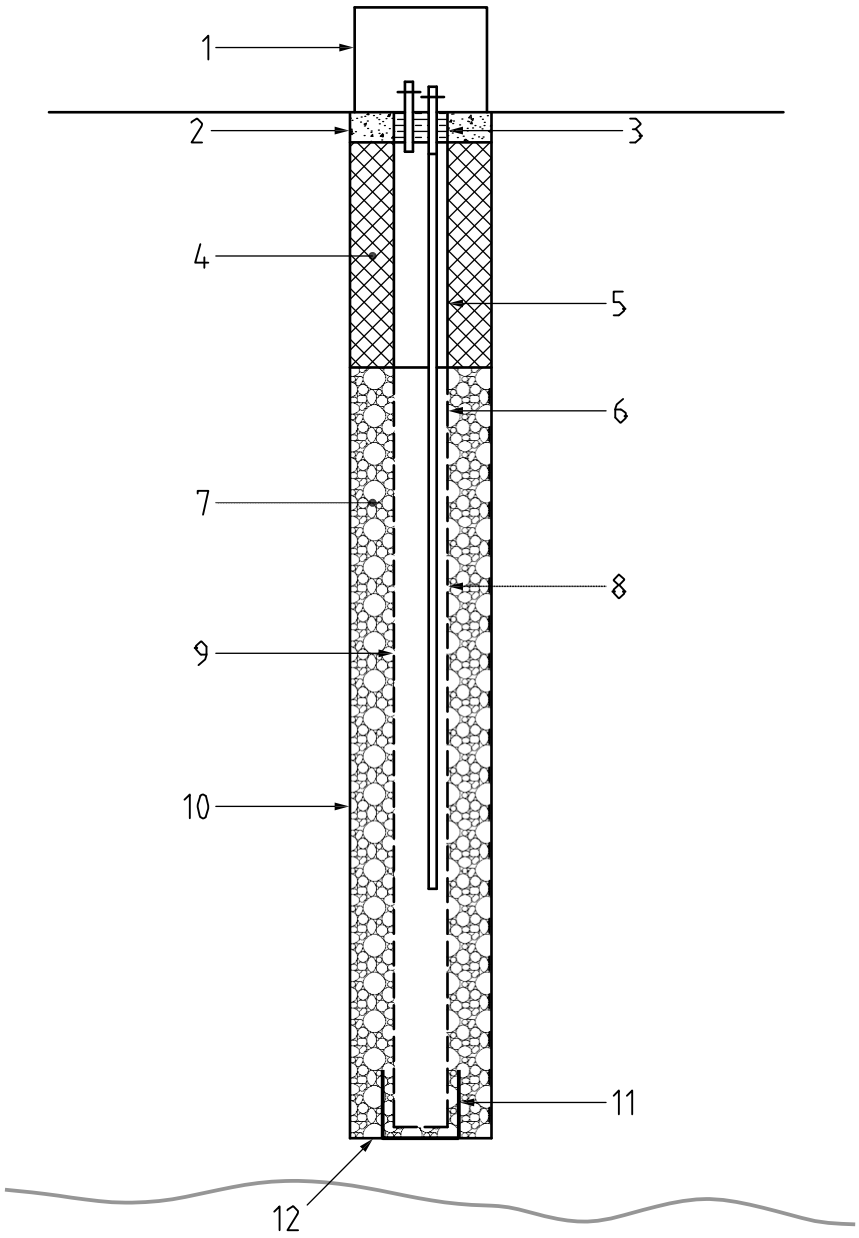

a) Well installed to base of borehole

NOTE See b) for Key

Bought by- Jonathan Tingley, Company - Geo-Environmental Services Ltd, on 13 March 2014 Latest version. Not to be distributed/networked. For multi-user access www.bsigroup.com/license © The British Standards Institution 2014

Figure 7 **Typical well design**

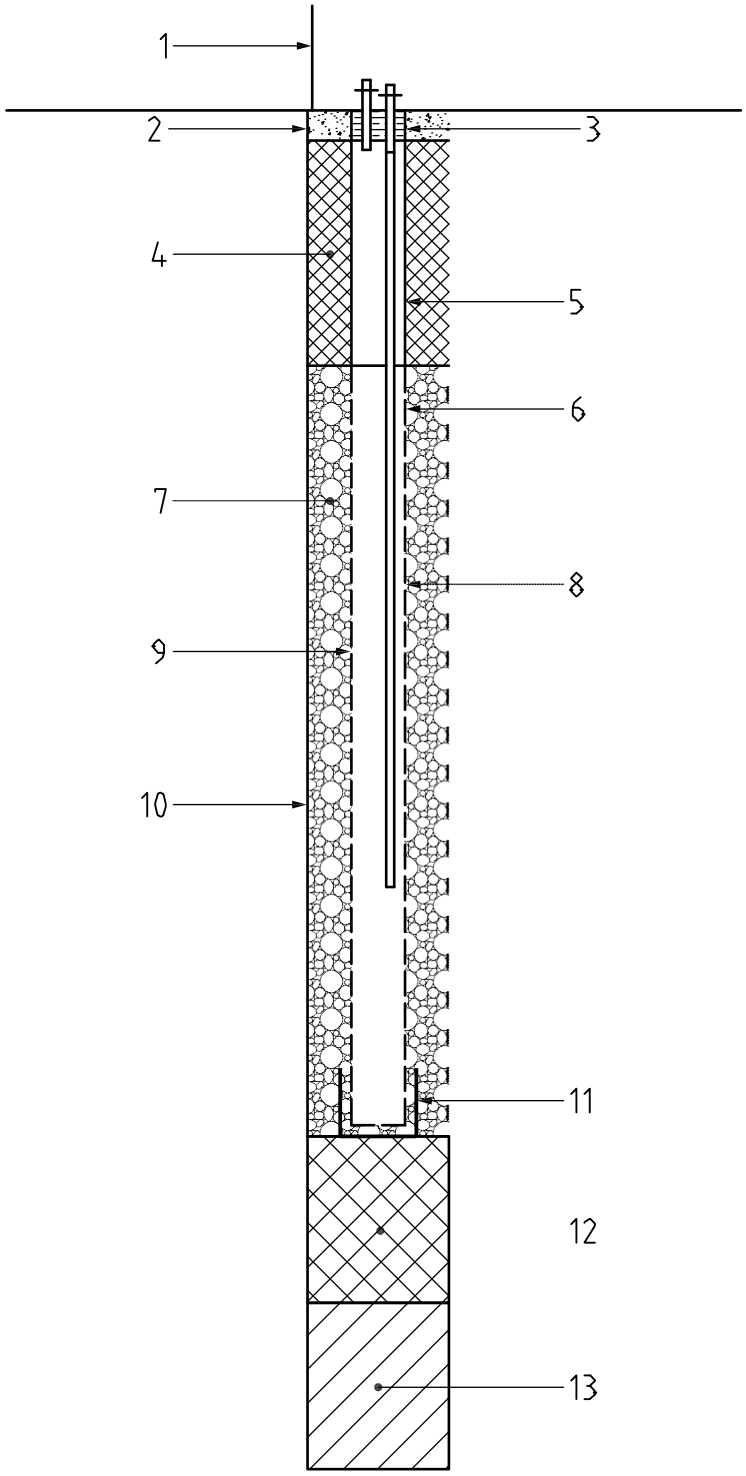

b) Well installed partway into borehole

Key

1 Lockable cover (above ground or flush with surface)
2 Concrete for cover
3 Rubber bung or plastic cap with two gas taps
4 Bentonite or cement:bentonite seal (minimum usually 1 m except where shallower response zone is required)
5 Unperforated well casing over at least the length of the bentonite seal
6 3 mm internal diameter nylon tube to 0.5 m above the base or the standing groundwater level
7 Non-calcareous single size gravel or similar inert material, of a suitable grain size in relation to the size of the annulus
8 Perforated or slotted well casing (factory slotted, not cut on site). Minimum slot area 10% of surface area of casing
9 Well casing diameter normally 50 mm (can be greater)
10 Borehole diameter normally 150 mm (can be greater)
11 Bottom cap
12 Bentonite or cement:bentonite seal below base of well, 2 m minimum
13 Borehole below well and seal backfilled with well compacted arisings

NOTE 1 Oversize covers are required with certain high-frequency monitors that are installed in the well head space.

NOTE 2 Bentonite or cement:bentonite pellets require hydrating and compacting.

NOTE 1 Most installations for measurement of permanent gases employ a 50 mm diameter pipe but narrow pipes (e.g. 19 mm or 38 mm) may be used where access for drilling rigs is limited such as in back gardens of houses. Wider pipes (e.g. 100 mm) may also be used occasionally. It is important to consider the impact of the pipe diameter on the monitoring results.

Bought by- Jonathan Tingley, Company - Geo-Environmental Services Ltd, on 13 March 2014 Latest version. Not to be distributed/networked. For multi-user access www.bsigroup.com/license © The British Standards Institution 2014

The annulus between the outer wall of the borehole and the slotted pipe should be filled in with non-calcareous single size gravel or similar inert material, of a suitable grain size in relation to the size of the annulus. The annulus around the plain un-slotted pipe should be filled with bentonite or cement bentonite grout. The top of the hole (generally between 1 m and 0.2 m from the ground surface) should be sealed with an impermeable plug (bentonite grout/bentonite cement, etc.), while the upper 0.2 m from the ground surface should be sealed with concrete or mortar to support and secure a cover.

Bentonite or cement bentonite grout should be placed so that it forms an effective seal. It can be mixed on the surface and tremied into place or pellets/chips can be used.

Whenever pellets are used in well construction, they should be well hydrated by the addition of water and should be tamped down at suitable intervals using a modified tamping hammer that fits down the annulus of the well (this ensures they have fully filled the annulus to the required depth). Sufficient time should be allowed for the pellets to swell (normally 30 minutes) before placing overlying materials.

NOTE 2 Simply pouring the pellets into the well at the surface without tamping might not form an effective seal, especially if the slotted section starts at some depth down the well. The pellets can become stuck part way down the hole, especially if poured in too fast. In addition, in the very weak hydrated gel state, if very high gas pressures are present, gas bubbles can penetrate and form continuous flow channels, breaking down the seal properties. Syneresis is the extraction or expulsion of a liquid from a gel and can occur in poorly designed or mixed bentonite grouts. Bleeding is the separation of water from the grout due to consolidation of the particles in a poorly designed mix. High concentrations of organic compounds can compromise the integrity of bentonite seals and cause an increase in permeability. Cement and bentonite might not fully hydrate in the presence of contaminated groundwater.

An air tight screw top or bung should be fitted to the top of the standpipe to allow access into the pipe in order to take ground water level measurements. Two gas taps should preferably be fitted to the cap from which gas samples can be taken (see *The monitoring of landfill gas* [22]). The gas taps should be a 15 mm ball valve with a hose nipple that has an internal diameter of 3.2 mm. The taps should be closed between monitoring events.

It is considered practical to employ two taps with a 50 mm diameter well but it is recognized that it might be difficult or impractical with smaller diameter wells. Given the technical advantages of using a two tap installation, this should be taken into account when deciding on the diameter of well to use.

NOTE 3 Unless care is taken in their fitting and use, most, if not all, standard rubber type bungs for monitoring wells leak. They typically leak around the edge of the bung where it fits to the standpipe or around the sides of the hosetail barb, if not the valve assembly itself (where users have not sealed the threads).

NOTE 4 The two gas taps allow the flow of gas from the standpipe to be opened or shut off as required. One gas tap allows sampling from the top of the well headspace, the other has a 3 mm internal diameter (ID) nylon (or similar) tube attached to it internally that extends to about 0.5 m above the standing groundwater level to allow full gas circulation until steady state conditions are achieved. Gas is extracted from one tap and recycled through the other tap after passing through the instrument to give an average reading, mixing the gas in the well in the process (this is only appropriate if the instrument does not change the composition of the gas). Alternatively, gas concentrations can be measured at the top of the well and at the base of the well by measuring separately through the two taps. Obviously, the lower pipe might become flooded if the groundwater level rises.

Bought by- Jonathan Tingley, Company - Geo-Environmental Services Ltd, on 13 March 2014 Latest version. Not to be distributed/networked. For multi-user access www.bsigroup.com/license © The British Standards Institution 2014

This arrangement is well tested and avoids the misleading results that can be obtained when gas is sampled through a single tap that only permits the testing of gas at the immediate top of the well. Gases that differ in density can be stratified in a well, e.g. carbon dioxide at the base and methane at the top.

The deeper point is not suitable for measuring flow rates.

Monitoring wells should be provided with sufficient protection to prevent tampering and vandalism. Suitable measures can include the installation of a lockable cover (e.g. stop-cock cover) set in concrete. Where possible, pipes should terminate above ground level as this prevents flooding and makes them easier to identify (this might not be possible on sites with public access). If in-borehole monitoring equipment is to be left in place, the head works should provide sufficient space to install the equipment with an air tight seal. Wells should be clearly and permanently marked with the well reference number and depth.

Multiple small diameter well tips can be installed in a single 150 mm diameter borehole (with a maximum of four well tips, otherwise sealing around the tubes becomes a problem). These are normally used for soil vapour investigations but can be used for monitoring permanent gases. They are not suitable for measuring flow rates.

9.2.4 Installation of driven monitoring probes

NOTE 1 Driven monitoring probes usually comprise a steel pipe perforated in the intended monitoring zone, with a steel point on the end to aid driving (see Figure 8).

Bought by- Jonathan Tingley, Company - Geo-Environmental Services Ltd, on 13 March 2014 Latest version. Not to be distributed/networked. For multi-user access www.bsigroup.com/license © The British Standards Institution 2014

Figure 8 **Driven monitoring probe**

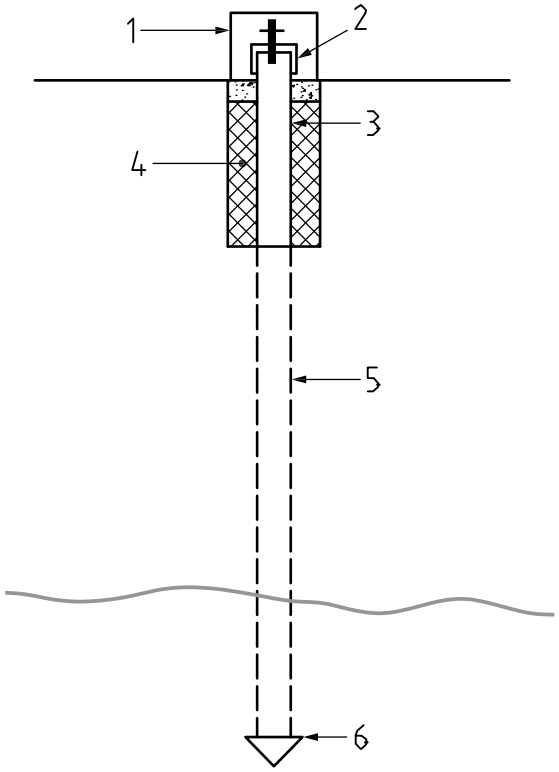

Key

1 Lockable cover (above ground or flush with surface)
2 Screw on cap with gas tap
3 Unperforated well casing over length of bentonite seal
4 Bentonite seal (minimum normally 1 m except where shallower response zone is required); placed in hand-dug or augered starter hole at surface
5 Steel perforated pipe (factory slotted, not cut on site); diameter normally 19 mm
6 Drive cone

NOTE Bentonite pellets require hydrating and compacting.

The top of the well should be provided with a gas tap and cover as described in **9.2.3**. A bentonite seal should be provided at the top of the well (0.2 m to 1.0 m – see **9.2.3**). This is provided in the hand-dug, cored, or augered starter hole that is a wider diameter than the drive-in probe.

Driven probes should not be used where there will be significant smearing of the ground along the pipe as it is driven in (e.g. in very high plasticity clay soils). Smearing can be minimized by using a drive cone that has a larger diameter than the pipe.

*NOTE 2 Other methods of investigation are required to determine the ground conditions around the response zone (**9.2.1**).*

NOTE 3 The installation of driven wells can be impeded by the presence of obstructions in the ground.

9.2.5 Multi-level installation in a single bore

NOTE 1 Multi-level well installations might be required to investigate different gas sources or migration pathways.

If 19 mm or greater monitoring wells are being used, each well should be installed in a separate borehole.

Bought by- Jonathan Tingley, Company - Geo-Environmental Services Ltd, on 13 March 2014 Latest version. Not to be distributed/networked. For multi-user access www.bsigroup.com/license © The British Standards Institution 2014

Smaller diameter installations typically use a 3.2 mm ID bore tube connected to a small gas sampling implant. The implant should be surrounded by a sand filter normally 1 m to 2 m in length. There should be a minimum of 2 m bentonite or cement bentonite seal between each response zone and a maximum of four gas implants in a single 150 mm diameter borehole. A typical set-up is shown in Figure 9. Such devices should not be used in saturated ground. Each tube should be clearly and permanently marked with the reference number and depth of response zone.

NOTE 2 Small diameter sampling probes installed in wells with small response zones have been very useful in defining the vertical extent of gas migration around landfill sites, and are of particular importance when sampling ground gases for VOCs.

Figure 9 **Small diameter sampling probes for gas monitoring**

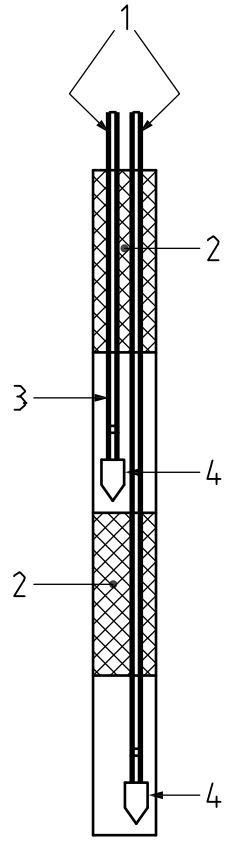

Key
1 3 mm outside diameter nylon tube
2 Bentonite seal
3 Vapour implant
4 Clean, sharp sand filter

9.2.6 Flux chambers

The use of flux boxes is not recommended for investigations of ground gas where the purpose is to assess potential risks to human health or the safety of existing or planned structures.

NOTE 1 The limitations of flux boxes and their use in investigations for ground gas are mentioned in "Guidance on evaluation of development proposals on sites where methane and carbon dioxide are present" [23] (Table 10.2, p.38).

Bought by- Jonathan Tingley, Company - Geo-Environmental Services Ltd, on 13 March 2014 Latest version. Not to be distributed/networked. For multi-user access www.bsigroup.com/license © The British Standards Institution 2014

NOTE 2 The EA publication "Guidance on monitoring landfill gas surface emissions" ([24] p.29) includes a section on using flux boxes to measure methane emissions from landfill surfaces. Their application on landfills is described as follows:

"A flux box is suitable for measuring emissions on relatively smooth landfill caps where the device can be readily sealed against the surface. The device is not suitable for measuring flux where the emission surface can not be enclosed or covered and adequately sealed by the box.

The lower detection limit for a flux box is an emission rate of methane through the surface of 5×10^{-5} mg/m^2/second, which is well below the applicable emission standard […]. The upper limit of effective measurement for the flux box is 5 mg/m^2/second (equivalent to 250 m^3/ha/hour of methane). Hence a flux box is only suitable for measuring where methane concentrations in the air close to the surface are low.

If the weather deteriorates during a survey such that the conditions outlined […] are no longer met, cease taking measurements with flux boxes till conditions improve."

It is therefore important to recognize the limitations of flux box monitoring and surveys when investigating ground gases, particularly on non-landfill sites. This is because their purpose is primarily for the measurement of emissions (methane) from the flat surfaces of landfill sites to check integrity of the cap following zoning of the site. Density of sample locations would be different for assessing risks to human health.

9.2.7 Surface surveys

A sensitive, hand-held gas detector, such as a flame ionization detector (FID), may be used during a site walkover to scan the air close to the ground surface and thus detect significant concentrations of methane. The surface sweep should be systematic and give a semi-quantitative ranking of the methane emissions from various features such as cracks in the ground.

9.3 Instruments for on-site use

9.3.1 Measurements of gas concentrations

Different instruments measure different gases over different concentration ranges, and each has its own advantages and limitations (see Table 3). The instruments required depend upon conditions at specific sites. The user should have a good understanding of gas monitoring equipment and which type should be used in a given situation.

Gas analysers used for monitoring of permanent gases should be designed specifically for the purpose of monitoring landfill or ground gas and as a minimum should conform to Table 2.

On occupational sites where gas is suspected to be present, such as landfill sites, equipment including gas analysers and depth gauges should be ATEX 95 certificated i.e. intrinsically safe.

NOTE 1 Attention is drawn to Directive 94/9/EC [25].

NOTE 2 If the site is occupational, then the owner has a responsibility under ATEX 137 (Directive 99/92/EC) [26] to protect the worker from explosive atmospheres.

Bought by- Jonathan Tingley, Company - Geo-Environmental Services Ltd, on 13 March 2014 Latest version. Not to be distributed/networked. For multi-user access www.bsigroup.com/license © The British Standards Institution 2014

Table 2 **Minimum specifications for ground gas analysis**

Accuracy	Methane and carbon dioxide: +/– 0.2% v/v across 0.0% to 5.0% v/v range +/– 1.0% v/v across 5.0% to 15.0% v/v range +/– 3.0% v/v across 15.0% v/v to full scale of instrument Oxygen: +/– 1.0% v/v across full scale of instrument
Range	Methane: 0% to 100% Carbon dioxide: 0% to 100% Oxygen: 0% to 25%
Pump flow rate	300 mL/min to 600 mL/min typical in free air

NOTE 3 In Table 3, the operational advantages and disadvantages of several portable instruments, along with the gases analysed, are given. For more details, see Annex G.

NOTE 4 Measurements of methane concentrations made using hot wire type catalytic gas detectors and flame ionization detectors are affected by low oxygen concentrations.

NOTE 5 Gas analysers can also be used to measure the concentration of a range of other gases (for example, hydrogen sulfide, carbon monoxide or hydrogen). The range and accuracy need to be appropriate for the assessment being carried out.

NOTE 6 Proprietary chemical indicator detector tubes are available for a wide range of gases.

Any instrument used in the field should be calibrated and achieve appropriate limits of detection. In addition the limitations and potential interferences should be clearly understood (see Table 3, Table 4 and **9.3.3**).

Instruments should be checked for correct functioning, e.g. that they can properly "zeroed", before each measurement, because sensors can become "poisoned" or damaged, causing the instrument to malfunction. If the instrument cannot be properly zeroed, this should be recorded and a decision made as to whether to continue to use the instrument. The person making the measurement should have prior instructions as to how to proceed in such circumstances.

NOTE 7 Having a replacement instrument available might be a prudent precaution.

Field testing for specific gases in monitoring wells (e.g. methane) should not be carried out using non-specific meters, for example, total flammable gas detectors.

Portable instruments which are to be used on gas-contaminated sites should be intrinsically safe; this is essential if the instrument is to be used within a confined space.

NOTE 8 Removing the cap or bung from the top of a well after the initial readings have been taken using the gas tap(s) and taking readings at different depths within the well can sometimes give useful information.

It might be useful to purge a well of gas before sampling. This should be done by pumping three times the volume of the headspace from the well and recording the variations in gas concentration whilst this is being done.

Bought by- Jonathan Tingley, Company - Geo-Environmental Services Ltd, on 13 March 2014 Latest version. Not to be distributed/networked. For multi-user access www.bsigroup.com/license © The British Standards Institution 2014

NOTE 9 Field testing is frequently non-specific, for example, using total flammable gas detectors and photoionization detectors. Under certain circumstances, infra-red technology or gas chromatography can be used to determine specific substances (subject to the limitations of the instruments declared by the manufacturer). See Report 131 [27].

NOTE 10 Hot wire type catalytic gas detectors and flame ionization detectors are affected by low oxygen content for methane measurements.

NOTE 11 Gas monitoring (including data logging facilities) equipment is available for well head or down-hole installation. This equipment can detect/measure ground gases and also record atmospheric and in-hole pressures/flow for trend assessment purposes.

Table 3 **Portable equipment to measure permanent gases**

Instrument	Gases analysed	Advantages	Disadvantages
Infra-red spectrophotometer (IR)	Carbon dioxide Aliphatic hydrocarbons Methane (if instrument maker says so)	Specific gases can be analysed within pre-defined ranges. Wide detection range. Sample is not destroyed. Additional instrumentation can be added to the instrument in order to measure trace gases and flow.	Reading might be affected by moisture. Possible interference by other gases/vapours such as hydrocarbons.
Laser diode meters	Methane	Specific to methane. Sensitivity of one part per million. Does not need hydrogen fuel source. Can be intrinsically safe.	Response time might be slower than other instruments.
Sensor with catalytic oxidation	Flammable gases	Sensitive.	Sensing element might deteriorate with age. Requires adequate oxygen. Not methane-specific. Not intrinsically safe. Sample is destroyed as part of measurement process.
Thermal conductivity detector (TCD)	Carbon dioxide and flammable gases	Wide detection range.	Not methane-specific. Errors can occur at low concentrations.

Bought by- Jonathan Tingley, Company - Geo-Environmental Services Ltd, on 13 March 2014 Latest version. Not to be distributed/networked. For multi-user access www.bsigroup.com/license © The British Standards Institution 2014

Table 3 **Portable equipment to measure permanent gases**

Instrument	Gases analysed	Advantages	Disadvantages
Flame ionization detector	Flammable gases	Very sensitive. Good for pinpointing emission sources.	Not methane-specific. Not always intrinsically safe. Requires oxygen. Possible errors if high levels of carbon dioxide. Sample is destroyed as part of measurement process.
Paramagnetic cell	Oxygen	—	Accuracy affected by changes in atmospheric pressure and contamination by dust, dirt, corrosives or solvents.
Colorimetric indicator tubes[A)]	Some permanent gases, e.g. hydrogen sulfide and hydrogen cyanide	Very easy to use. Wide detection range.	Limited precision and readability. High cross sensitivity.
Electrochemical cells	Oxygen Carbon monoxide Hydrogen sulfide	Simple to use.	Moisture can reduce sensitivity. Limited shelf-life.

[A)] Colorimetric indicator tubes contain chemicals that react to a specific compound to form a stain or colour when passed through the gas. The tubes are used once and discarded. The concentration of the contaminant is determined by the length of the stain (or the intensity of a patch of colour) after passing a known volume of air through it. The manufacturer calibrates the tubes, but since the measurement is directly related to exposure time, the flow rate, and the extractive technique, it is susceptible to error. Tubes made by different manufacturers are not interchangeable because of size, volume and flow rate requirements.

Table 4 **Portable equipment to measure flow rates and borehole pressure**

Instrument	Method of measurement	Advantages	Disadvantages
Thermal dispersion flow transducer This instrument is now widely used and accepted for the measurement of gas flow. The monitor can also be used to measure gas pressure in the borehole (via calculation and calibration).	Direct measurement of flow rate using thermal dispersion flow transducer. This sensor directly measures the flow rate from a standpipe. This can be a stand alone instrument or incorporated into a handheld gas monitor.	Measured directly at monitoring point. Simple method. Robust, hand held monitor. Flow measurement not affected by wind, steam or contaminants.	Prone to dust and condensation build up. Correction factors should be applied if the gas composition is significantly different to that of air.
Orifice plate	Determines the pressure drop across an orifice and calculates a flow from calibration curves.	—	—

Bought by- Jonathan Tingley, Company - Geo-Environmental Services Ltd, on 13 March 2014 Latest version. Not to be distributed/networked. For multi-user access www.bsigroup.com/license © The British Standards Institution 2014

Table 4 **Portable equipment to measure flow rates and borehole pressure**

Instrument	Method of measurement	Advantages	Disadvantages
Rotameters, vane anemometers, bubble-flow meters These instruments have been widely used. Generally more appropriate for use on a gassing landfill sites where the pressure and flow is greater. Soap bubble meters typically offer less resistance and are therefore more appropriate for sites with low pressure and flow. However, the measurements can still be unreliable due to fluctuations.	Rotameters consist of a graduated vertical tube with a taper towards the lower end. Flow is represented by the position of a float within the tube. Bubble-flow meters are based on the time taken for a soap bubble to rise up a graduated tube with a known volume. The volume is recorded and converted to the volume flow of gas. Vane anemometers operate by counting the number of revolutions per unit-time of a vane which rotates in the presence of a gas flow.	Measured directly at monitoring point. Simple method. Flow measurement not affected by wind, steam or contaminants.	Can only be used where gas quantity and pressure are high. Calibration is affected by the density, temperature and pressure of gas mixture. Can underestimate. Prone to damage. Correction factors should be applied if the gas composition is significantly different to that of air.
Hot wire anemometer	These instruments use a very fine electrically-heated wire as a sensor. As the electrical resistance of most metals is dependent upon the temperature, a relationship can be obtained between the resistance of the wire and the gas flow speed.	Excellent spatial resolution. High frequency response.	Fragile, can be used only in clean gas flows. Need to be recalibrated frequently due to dust accumulation (unless the flow is very clean). Generally not purpose-designed. Might be less sensitive than other methods and less reliable under practical conditions.

9.3.2 Sample volumes

When sampling landfill gas and similar ground gas, large sampling volumes should be taken that are representative of the whole of the response zone.

However, a small volume of gas (say about 10 mL) may be taken from within a soil horizon to yield a sample that is probably not affected by external factors using appropriate equipment (e.g. a driven probe with integral gas extraction system that can yield real-time data as the probe is inserted).

NOTE 1 The large volume may be a sample extracted for off-site analysis or a volume of gas passed through an on-site measuring instrument.

NOTE 2 When sampling larger volumes (up to several litres) for in-situ measurements or off-site measurements, the source of the gas is diffuse and the precise location of the source cannot therefore be determined.

Bought by- Jonathan Tingley, Company - Geo-Environmental Services Ltd, on 13 March 2014 Latest version. Not to be distributed/networked. For multi-user access www.bsigroup.com/license © The British Standards Institution 2014

9.3.3 Flow rate measurement

Flow rates can be measured using a variety of dedicated instruments (see CLR 11 [3]) or in the case of very low flow rates (up to 70 L/h) using flow meters built into gas analysers. If monitoring results are to be used in the risk screening method in CIRIA C665 [4], the meter should record flows from 0 L/h to 70 L/h and have a resolution of 0.1 L/h.

Where little or no gas flow is expected, the equipment should be capable of measuring low flow rates in the order of litres per hour.

NOTE 1 Several techniques for measuring gas flow rates, including their advantages and disadvantages, are listed in Annex H.

Reports of flow results should state clearly which method has been used for the reasons outlined in Note 6 to Note 10.

NOTE 2 The most appropriate instrument depends on the expected flow rates from the borehole.

NOTE 3 In theory, flow rates are affected by factors such as the diameter of a well, the amount of perforations in the well casing, etc. In practice, natural variations in ground conditions and gas generation have a greater influence that masks any affect the borehole might have on the measured flow rates on low flow sites.

NOTE 4 The use of a consistent method is the most important factor.

Negative flow rates should be measured and recorded.

NOTE 5 Negative flow rates usually occur when the surface of the ground is effectively sealed or has only limited permeability so that atmospheric air is inhibited from entering the ground. They might then be found, for example, when:

- *increases in atmospheric pressure only slowly transfer into the ground;*
- *the groundwater level falls;*
- *preferential reaction or solution of a component of the ground gas occurs.*

A standard diameter of well should be used (see **9.2.3**). 50 mm diameter wells are preferred, although if access is difficult, 19 mm diameter wells can be used with caution. Gas taps should be a standard internal diameter (see **9.2.3**). Where the meter requires flexible tube to connect it to the well, the flexible tube should be 3 mm internal diameter and 600 mm long.

Flow meters should always be used following the equipment manufacturer's recommendations.

Before flow rates are measured, any moisture filters should be removed from the tube connecting the meter or analyser to the monitoring well.

Steady state flow rates, rather than brief peak values on opening, should be used in screening risk assessments. If flow rates are used in either screening or detailed quantitative risk assessments, the assessor should be satisfied that the measured values are representative of the site conceptual model.

NOTE 6 Flow meters built into hand held gas analysers are usually one of two types.

- *Orifice style flow sensor which determines the pressure drop across an orifice and calculates a flow from calibration curves. This gives a restriction to the flow. The restriction is considered to provide a more repeatable measurement as the restriction removes uncertainty associated with the installation and construction of the monitoring well and gas tap. This method tends to record lower flows than other methods.*
- *Thermal dispersion flow transducer. This does not cause any additional restriction to flow through the meter as part of the measurement process.*

Bought by- Jonathan Tingley, Company - Geo-Environmental Services Ltd, on 13 March 2014 Latest version. Not to be distributed/networked. For multi-user access www.bsigroup.com/license © The British Standards Institution 2014

Whichever method of flow measurement is used, the important factor is to be consistent on any site.

NOTE 7 The use of an orifice style sensor can lead to under recording of gas flow in some wells. There are examples where the difference has been up to an order of magnitude. The differences are most noticeable where higher flow rates are occurring.

NOTE 8 The commonly used gas risk assessment method was developed using data recorded with flow meters without a restriction (see Reliability and risk in gas protection design [28]).

NOTE 9 Flow meters, particularly those using thermal transducers, can be sensitive to wind flowing across the outlet port during monitoring, which can affect the reading (usually an indication is fluctuating negative to positive flows). The influence of wind can be reduced by attaching a 600 mm length of 3 mm diameter tube to the outlet and ensuring it is shielded from the wind during flow monitoring.

NOTE 10 Flow readings taken from a standard gas well installation might be affected by barometric pumping (whether this occurs or not depends on the response zone length and ground conditions). Flow rates can also be affected by changes in groundwater levels with artificial pressure building up in the headspace if water levels increase when the gas tap is closed.

9.3.4 Monitoring well pressure measurements

Monitoring well pressure measurements can be recorded in one of two ways. Results from the two different methods should not be confused and are not comparable. Reports of pressure readings should state whether the reading is static or dynamic.

- Static pressure is uniform in all directions in a static fluid. In a borehole well headspace that is regularly vented to atmosphere, the static pressure is the same as atmospheric pressure.
- Dynamic pressure: the pressure indicated is the pressure difference between the gas in the entrance of the sample tube and atmosphere whilst the gas is flowing (i.e. the driving pressure). Pressure will be shown to reduce as gas from the borehole is exhausted through the instrument and flows reduce. This is generally accepted as a good analogy for the borehole venting to atmosphere. The differential pressure is calculated from the flow and the calibration of pressure is only valid when the sample tube is as specified by the manufacturer. It is not valid if the sample tube length is changed, the sample tube diameter is changed or if any in-line filter is added. The pressure reading that would be taken with a digital manometer would not be the same. This is because a digital manometer does not allow gas flow and therefore takes a static pressure reading. This is not analogous to a borehole venting to atmosphere. In the monitoring system frictional pressure losses can be quite significant compared to friction losses in a venting borehole.
- Differential pressure can be the difference between atmospheric pressure and static borehole pressure or it can be the dynamic pressure (which is the differential between total pressure and static pressure).

NOTE 1 Instruments that can be used to measure flow rates and borehole pressure are listed in Table 4.

NOTE 2 Pressure readings for use in gas risk assessments normally need a resolution of 1 Pa.

Bought by- Jonathan Tingley, Company - Geo-Environmental Services Ltd, on 13 March 2014 Latest version. Not to be distributed/networked. For multi-user access www.bsigroup.com/license © The British Standards Institution 2014

NOTE 3 Pressure losses in the measurement system might be significant. In practice, the driving pressure is the static pressure less the atmospheric pressure less the pressure losses in the system due to friction. The losses due to friction in the measurement system might be high compared to the losses in a venting borehole. Thus, measurement of dynamic pressure might not yield sufficient information on its own.

9.4 Recording information when monitoring or sampling

In addition to recording measurements such as gas concentrations, borehole flow rates and borehole pressures, etc., the following information should be recorded when permanent gases are being investigated (see also Annex E):

- weather conditions (temperature, pressure, wind, rainfall) for at least three days before and after the monitoring events;
- atmospheric pressure for the preceding three days (to show the change, if any, in pressure);
- the state of ground surface at the time of monitoring (dry, wet, covered with snow, etc.);
- water level in the monitoring well;
- depth to the base of the monitoring well;
- condition of the monitoring well, diameter and depth of response zone;
- activities that could affect results, e.g. dewatering of nearby excavations, removal of surface cover;
- visible or audible indications of gas migration from or around the well (e.g. hissing sounds);
- any unusual odours in or around the well;
- any signs of settlement or vegetation distress around the well;
- evidence of condensation inside the well for each set of readings;
- whether the gas taps have been left open or closed (they should have been left closed, unless deliberately left open for a specific, recorded reason).

NOTE 1 It might also be useful on some sites to record wind speed and direction.

NOTE 2 Information on recent weather conditions close to a site can be obtained from the MET Office website: www.metoffice.gov.uk.

9.5 Making on-site measurements

9.5.1 General

Data for each well should be recorded in the following order:

- pressure in, and gas flow from, the monitoring well;
- confirmation of the results of leak test, if required (this should be carried out after measuring flow rates and borehole pressure);
- ambient gas concentrations;
- gas concentrations;
- well temperature (if required);
- depth to groundwater;
- depth to base;
- ambient temperature;
- atmospheric pressure.

Bought by- Jonathan Tingley, Company - Geo-Environmental Services Ltd, on 13 March 2014 Latest version. Not to be distributed/networked. For multi-user access www.bsigroup.com/license © The British Standards Institution 2014

Readings should preferably be taken from dual tap installations (see **9.2.3**).

NOTE 1 Measurement of ambient gas concentrations provides a check on the correct functioning of instruments and, in the case of VOCs, background concentrations. The latter might be important when the investigation is on a site where VOCs are likely to be present in the atmosphere (e.g. fuel service stations).

NOTE 2 In most cases, the composition, borehole pressure and flow rates of gases are of primary interest in the assessment of risks. In some circumstances, the purging of monitoring wells to obtain a sample of pore space gas is required.

The gas taps should be checked to see if they have been left open or closed since the last visit (they should have been closed unless deliberately left open for a specific, recorded reason) and to ensure that the taps are not blocked by water trapped in the tip. The tip can be unblocked by removing the tip and clearing the blockage when the tap design permits it to be done without first opening the tap.

If necessary, leakage tests should be carried out before sampling.

Normally, where the gas analyser is directly connected to the gas well by a single tube, the potential for leaks is minimal. The tubes should be pushed well onto the connections at each end (by at least 10 mm) and should be a tight fit. The well head cap should be inspected for any obvious leaks and should be pushed well into the well screen or screwed on tightly.

Where portable instruments are used, they should be connected securely to the sample point and gas should be allowed to flow through the instrument until a steady reading is obtained. A reading should be taken of both peak and steady-state concentrations.

NOTE 3 The time to reach steady state conditions varies from well to well.

If more than one instrument is required to measure different gases, this procedure should be followed for each of the gases. If the instruments are fitted with pumps, and provided that the sample is not destroyed in the measurement process, the instruments can be put in series, with the exhaust from one instrument going into the inlet of the next instrument. In this case, it is advisable to fit non-return valves in the inlets to the instruments to prevent air being drawn back through them by the other instruments. Instruments should be proved gas-tight. If an external pump is applied, then this should be installed after the series of measuring instruments.

When taking a gas measurement from a standpipe, a length of sample line is usually required to connect the borehole to the gas analyser. This should be kept to a minimum, in general no more than 1 m. Care should be taken when selecting sample lines, as certain compounds can be adsorbed onto them. For example, polyvinyl chloride (PVC) absorbs water vapour and releases it in a dry air stream, while polyethylene is permeable to oxygen and carbon dioxide. Where possible, internally clean stainless steel should be used, or if flexibility is required, polypropylene is suitable for most gases. Silicone tubing, polyethylene and PVC should be avoided where possible.

A column of drying agent might need to be placed along the sampling line to prevent the moisture contained within the ground gas from damaging the instrument. Consideration should be given to the type of drying agent used, as this can affect readings. Silica gel absorbs gases such as carbon dioxide, especially when wet. In most cases, either calcium chloride or anhydrous calcium sulfate is recommended. For sensitive analysis, magnesium perchloride is probably the most suitable. Instrument manufacturers often supply proprietary hydrophobic filters, but care should be taken that only specified filters are used. Alternatively, a gas cooling device, e. g. with a Peltier element and fixed water separator, can be used.

Bought by- Jonathan Tingley, Company - Geo-Environmental Services Ltd, on 13 March 2014 Latest version. Not to be distributed/networked. For multi-user access www.bsigroup.com/license © The British Standards Institution 2014

In some cases, during sampling, it can be beneficial to record the gas concentrations and flow rates observed in a borehole using a data-logging device. In most cases, the gas analyser has a data logger connection. This can be used to log at pre-defined frequencies. When monitoring from a borehole, it is advisable to log every few seconds. This shows the steady-state concentrations, as well as the range of concentrations. In most cases, the data logger can be downloaded onto a computer software package for further analysis and data storage.

NOTE 4 Hot wire type catalytic gas detectors and flame ionization detectors are affected by low oxygen content for methane measurements.

NOTE 5 The measurement results can be influenced by, e.g. temperature, humidity, air pressure, minimum extraction depth, etc. Monitoring results from a well head space needs interpretation to infer conditions in the soil pore spaces.

9.5.2 High-frequency monitoring

NOTE 1 High-frequency monitoring involves the sampling of gases and other environmental parameters, typically at frequencies of several times per day, from a fixed point. The higher the frequency of monitoring, the more representative the data set will be of monitoring point conditions over the period of monitoring. Where the frequency of sampling is equal to or greater than the change in the parameters being monitored, the data set can be termed continuous.

NOTE 2 High-frequency and continuous data can allow a range of correlations between gas concentrations and environmental variables to be identified, which can be used within both detailed qualitative and quantitative assessments, including statistical analysis and sensitivity analysis.

NOTE 3 Gas monitoring (including data logging facilities) equipment is available for well head or down-hole installation in both fixed and mobile forms. Hand held gas analysers can also be set to data log at set intervals for a period of time. The instruments use the methods of analysis for different gases described in Table 3.

The period over which high-frequency and continuous monitoring is conducted should take into account site-specific circumstances and the type of assessment being completed. For ground gas risk assessment purposes, high-frequency monitoring should be conducted over a period of time that covers sufficient variation in the most critical factors that affect gas emission from the ground. Examples are weather conditions, atmospheric pressure drops, changing ground-water levels and tidal effects.

NOTE 4 When ground gas monitoring is carried out for risk assessment purposes, continuous data can be obtained using hourly sampling rates. In the case of occupational exposure monitoring, for example in confined spaces, the sampling frequency is typically of the order of a few seconds or less.

NOTE 5 Where high-frequency monitoring has been deemed appropriate for risk assessment purposes in the UK, a period of three to six weeks high-frequency monitoring has typically been carried out to provide data and capture gas concentrations over a range of weather conditions. Where there is potential for significant seasonal variation within the ground gas regime (e.g. deep domestic landfill), additional periods of high-frequency monitoring might be considered.

NOTE 6 High-frequency and continuous data might be useful to provide better characterization of the gas risks at higher characteristic situation sites (see CL:AIRE Research Bulletin RB 13 [29]) or when greater confidence is required regarding large capital expenditure for a proposed remedial solution.

Bought by- Jonathan Tingley, Company - Geo-Environmental Services Ltd, on 13 March 2014 Latest version. Not to be distributed/networked. For multi-user access www.bsigroup.com/license © The British Standards Institution 2014

When it is considered appropriate to carry out high-frequency monitoring, regular visits should be made to site to record the condition of the ground surface and other nearby activities as described in this subclause. The length of time that high-frequency monitoring is carried out should be appropriate for the assessment being undertaken. Where such monitoring is carried out for a short period of time, the benefit of a greater data density over the short period should be weighed against the lower data density from individual monitoring events spread over a longer period of time that covers greater seasonal variations.

Down-hole high-frequency samplers should be set to non-venting mode. They can also be set to vent at prescribed intervals if the assessment requires this. The venting mode should be clearly stated on all output from the instrument (including graphs) as it affects borehole pressure measurements.

Prior to installation on a site, high-frequency monitoring instruments should be left monitoring for an extended period of time, in an environment where the gases to be monitored are not present. These results should be reported with any subsequent site results. This is to assess baseline drift in the instruments.

Allowance should be made for depletion of the gas source when interpreting the results if high numbers of samples are being taken, and the gas is not being recirculated back into the well. Similarly, where the gases are passed over destructive sensors before recirculation, consideration should be given to the resulting depletion of the gas source.

NOTE 7 As with all monitoring equipment, it is necessary for high-frequency monitoring devices to be maintained and serviced to the manufacturer's recommendations and be periodically checked to confirm sensor calibration.

9.5.3 Recharge and recirculation tests

Gas emissions into the head space of a well can be measured by recharge or recirculation tests.

Baseline measurements of gas concentrations are first made. Gas is then purged from the well by flushing with an inert gas. Readings of gas concentrations are taken at regular intervals (typically initially every few minutes) as the gas is circulated from the well, through the measuring instrument, and back to the well. The gas should not be exhausted to atmosphere as this induces a flow from the ground into the well. A quasi-flow rate is determined from the rate of gas concentration during the initial period whilst the measured gas concentration is rising rapidly.

NOTE 1 CIRIA 131 [27] recommends the use of helium. However, there is a limited supply of helium and so nitrogen may also be used, provided that there is certainty that it will not interfere with the readings or their interpretation.

NOTE 2 In a sealed well, the method measures the change in concentration as gas diffuses from the gravel pack surrounding the plastic well pipe or the ground immediately around the well because the sealed well will be in equilibrium with the pressure in the ground around it. The build-up of gas concentration resulting from diffusion into the purged well in which the initial concentration is zero will initially be rapid, but will then decrease asymptotically to eventually equal the concentration in the surrounding ground.

NOTE 3 There are concerns over the accuracy of this method. In particular, on highly gassing sites, it can underestimate gas emissions [4].

This method should only be used on sites where there is no flow or positive pressure in the well (see CIRIA 131 [27]).

It should not be used to replace flow rate measurements but may inform a more detailed risk assessment.

Bought by- Jonathan Tingley, Company - Geo-Environmental Services Ltd, on 13 March 2014 Latest version. Not to be distributed/networked. For multi-user access www.bsigroup.com/license © The British Standards Institution 2014

Analysis of recharge or recirculation tests should take account of the volume of gas removed by the instrument during pumping (e.g. because it is burnt in the instrument). If in-well instruments are used the volume of gas displaced by the instrument should be allowed for (this can result in a very small well headspace volume that can give a high concentration for a very small volume of gas re-entering the well).

The gas used to flush the well should be reported.

9.6 Sampling for laboratory measurements

The permanent gas concentrations in the well should be recorded before and after sampling to provide a control on the laboratory results and to show if any depletion of gas has occurred during sampling.

Gas samples can be taken using a variety of methods. Samples of gas taken from wells should be extracted into a suitable container that will not affect the composition of the gas sample. Selection of suitable apparatus and sampling procedure should be agreed between the analyst and the sampling staff. The laboratory that is undertaking the analysis should confirm that the sample container is made of a suitable material and provides a sufficient volume of sample to achieve the required limit of detection.

NOTE 1 A simple and widely used method of collecting gas samples is to use pressurized sampling cylinders. A hand pump is used to compress the sample into a small cylinder made from either aluminium alloy or preferably stainless steel. The cylinders can vary in capacity from 15 mL up to 110 mL.

Another method is the use of a gas sampling vessel, which can be sealed at both ends by taps or valves. The vessel is connected to the sample point with a vacuum pump or hand aspirator in-line to provide suction. Gas is drawn through the vessel until at least three to five changes of the vessel volume have passed through.

All containers should be flushed with an inert gas, such as argon, before the sample is taken. It is important to be consistent in the methods of sampling, the apparatus used and the analytical and measurement techniques employed. It is important to consider the possibility of adsorption onto the surfaces of containers and, where necessary, treated containers should be used.

If analysis is to be carried out for active sulfur compounds (e.g. organosulfur compounds such as mercaptans [thiols] and hydrogen sulfide), steel adsorption tubes, steel containers, and steel tubing in instrumental set-ups should be internally coated to prevent the sulfur compounds being adsorbed or reacting with the steel, possibly being degraded.

Equipment for collecting gas samples is often quite specialized and requirements should be clearly understood and advice on sampling requirements and procedures obtained from the test laboratory before use. It is vital that there are no leaks in the sampling system that could draw gas into the sampling chamber from the surrounding air as this might give erroneous results.

Storage characteristics (time and conditions) of the vessels should be determined using mixtures of gases of defined concentrations of the determinands.

Gas samples should either be analysed directly using appropriate instrumentation, or absorbed into liquids, or adsorbed on to solids prior to analysis or identification of individual constituents, in the laboratory. The adsorption/desorption method can introduce bias (for example, by incomplete recovery of the vapour), so account of this should be taken when reporting results.

Gas samples can be taken for isotopic testing in the laboratory (e.g. $\delta^{13}C$, $\delta^{2}H$) (see *Methane: its occurrence and hazards to construction* [14]). This is a specialized field and consequently advice should be obtained from the test laboratory.

Bought by- Jonathan Tingley, Company - Geo-Environmental Services Ltd, on 13 March 2014 Latest version. Not to be distributed/networked. For multi-user access www.bsigroup.com/license © The British Standards Institution 2014

*NOTE 2 Isotopic testing can aid in the identification of the source of permanent gases (see **D.7**).*

9.7 Storage and transport of samples for laboratory analysis

The collected samples should be clearly labelled with the date, time, location and, where possible, the approximate concentration of at least one major component. If samples cannot be analysed immediately, the sample should be kept under temperature conditions identical to those prevailing at the time of collection. An insulated box, fitted with a lid and a maximum/minimum thermometer, is recommended for this purpose.

Gas samples should be delivered to the laboratory and tested without delay (including those for isotopic analysis).

10 Field work – VOCs

10.1 General considerations

Ground gas samples can be collected from the unsaturated zone adjacent to, or above, the known or suspected source of VOCs in ground gas through installation of a ground gas monitoring point in the unsaturated zone (see **10.2**), and from a near-surface location beneath hardstanding or a floor or foundation slab through installation of a near- or sub-slab monitoring point (see **10.3**).

Detection and determination of VOCs in ground gas may be undertaken by:

- monitoring in the field (see **10.5**, **10.6** and **10.7**); and
- sampling ground gas and subsequent analysis in the laboratory or field for VOCs (see **10.8** and **10.9**).

10.2 Construction of unsaturated zone gas monitoring wells to sample for VOCs

10.2.1 General

Monitoring wells intended for the sampling of VOCs should be formed generally as described in **9.2.1** to **9.2.5**. The details of construction should be varied as necessary to make them particularly suitable for the monitoring and sampling of VOCs (see **10.2.2** and **10.2.4**).

Ground gas monitoring wells to enable sampling of ground gas from the unsaturated zone for VOCs analysis should preferably be installed in narrow diameter boreholes to limit the disturbance to the underlying ground. The strata encountered should be recorded in accordance with BS EN ISO 14688-1, BS EN ISO 14688-2 and BS EN ISO 14689-1 during the installation of wells when the selected method permits this to be done. The descriptions of the strata encountered should include reference to:

- any visual (e.g. hydrocarbon staining) or other indication (e.g. odour) that VOCs are present;
- the presence of any biodegradable material or other material that might give rise to gas, including the proportion of such material when this is practicable.

Installations can be permanent, to allow multiple sampling visits, or temporary, where more than one sampling visit is not planned. Multiple level monitoring tubes can be installed into a single borehole, provided that an appropriate seal can be formed between sampling horizons.

Bought by- Jonathan Tingley, Company - Geo-Environmental Services Ltd, on 13 March 2014 Latest version. Not to be distributed/networked. For multi-user access www.bsigroup.com/license © The British Standards Institution 2014

Installation should not be carried out in a trial pit with subsequent backfilling due to the disturbance and aeration of the ground and the uncertainty of the period necessary for original ground conditions to re-establish before monitoring can continue.

NOTE When sampling for certain VOCs, stainless steel monitoring wells might be required. For example, if vinyl chloride is a target analyte, sampling from a PVC well is not appropriate.

10.2.2 Borehole formation for monitoring VOCs in ground gas

NOTE Guidance on the formation of boreholes can be found in BS 5930 and BS 10175. The borehole should be progressed to the target sampling depth within the unsaturated zone. Methods for borehole formation for VOC monitoring are shown in Table 5.

The monitoring well should be installed into unsaturated ground to allow sampling for VOCs to take place. The borehole should not be progressed below the groundwater table or the surface of any floating non-aqueous layer. The borehole should be progressed to the target sampling depth within the unsaturated zone.

Bought by- Jonathan Tingley, Company - Geo-Environmental Services Ltd, on 13 March 2014 Latest version. Not to be distributed/networked. For multi-user access www.bsigroup.com/license © The British Standards Institution 2014

Table 5 **Options for monitoring well installations to sample VOCs in ground gases in the unsaturated zone**

Installation	Method	Description	Advantages	Disadvantages
Temporary or permanent	Shallow/ driven probe (hollow rod)	Use of a hollow metal spike to drive into the ground. A seal is formed between the surface and the spike. A ground gas sample is collected from the rod while still in the ground.	Very quick. Cheap. Easy to install. Limited ground disturbance so ground gas regime should re-equilibrate quickly.	Max. depth of 2 m. Can become blocked. Cannot penetrate difficult ground. A good seal to prevent atmospheric entrainment during sampling might be difficult to achieve. Soil samples cannot be recovered.
Temporary	Auger	Many designs available for different soil types, conditions, and sampling requirements. Preferred forms take a core sample. The auger is used to form a "borehole" of suitable diameter into which a suitably formed sampling pipe can be placed, the annulus filled with granular material to the required depth, and the top of the annulus sealed, generally as described in **9.2.3** and **10.2.3.**	Cheap and easy to use. Allows unspecified sampling of solids. Deeper than spiking/shallow probes depending on ground conditions. Limited ground disturbance so ground gas regime should re-equilibrate quickly.	Physically difficult. Cannot penetrate difficult ground. Can be time consuming. A good seal to prevent atmospheric entrainment during sampling might be difficult to achieve. Soil samples cannot be recovered.
Temporary or permanent	Driven probes	Hollow tube with solid nose cone. Mechanically driven into the ground. Monitoring pipe installed inside tube. Tube extracted leaving behind nose cone.	Minimal ground disturbance. Easily portable thus access problems unlikely. Max. depth of 10 m. Can be installed with a permanent monitoring pipe.	Does not penetrate obstructions. Can cause smearing in clayey soils, which restricts gas ingress into the probe hole.

Bought by- Jonathan Tingley, Company - Geo-Environmental Services Ltd, on 13 March 2014 Latest version. Not to be distributed/networked. For multi-user access www.bsigroup.com/license © The British Standards Institution 2014

Table 5 **Options for monitoring well installations to sample VOCs in ground gases in the unsaturated zone**

Installation	Method	Description	Advantages	Disadvantages
Permanent	Bore-holes (without flushing device)	Borehole is sunk using (narrow diameter) percussive windowless or window sampling technique. A perforated standpipe is installed and surrounded with gravel. If a casing has been used, this is then withdrawn	Great depths attainable. Minimal disturbance to ground. Can take samples of strata at different depths during drilling. Can install several pipes in one borehole to measure at different depths if appropriately screened.	Brings contaminated material to the surface. Care is needed to avoid enabling contamination of an underlying aquifer. More disturbance to ground so time required for ground gas regime to re-equilibrate. Might be difficult to achieve narrow diameter.
Permanent	Bore-holes (with flushing device)	Borehole formed using (narrow diameter) continuous flight auger. A perforated standpipe is installed and surrounded with gravel. If a casing has been used, this is then withdrawn.	Great depths attainable. Minimal disturbance to ground. Can install several pipes in one borehole to measure at different depths if appropriately screened. Can take samples of strata at different depths during drilling.	Relatively slow and expensive. Might have access problems. Brings contaminated material to the surface. Care is needed to avoid enabling contamination of an underlying aquifer.

10.2.3 Installation of monitoring wells for sampling VOCs

A pipe of maximum 50 mm diameter should be installed to the base of the borehole. The bottom section of the pipe (a maximum length of 1 m, but typically 0.15 m to 0.5 m – see Figure 10) should be pre-slotted to target the desired sampling depth. The pre-slotted section, or sampling point, typically comprises a metallic (e.g. stainless steel, copper) or nylon meshed tube. The remaining section of the pipe should be un-slotted (plain), and may be metallic (e.g. stainless steel, copper) or plastic. Where the pipe used requires multiple sections to be joined together, the pipe should comprise sections which can be fitted together with screw threads, as this avoids the need for organic compounds and solvents to seal the lengths together.

NOTE 1 Small diameter pipes (3 mm to 10 mm) in small diameter boreholes or narrow driven probes are often favoured for measurement of VOCs in ground gas to limit disturbance of the ground. However, pipe diameters of up to 50 mm can be used.

NOTE 2 It is necessary that the sampling pipe material is selected with reference to the types of VOCs known, or suspected, to be present, to mitigate the risk of sorption to the monitoring tube or other interference effects.

Bought by- Jonathan Tingley, Company - Geo-Environmental Services Ltd, on 13 March 2014 Latest version. Not to be distributed/networked. For multi-user access www.bsigroup.com/license © The British Standards Institution 2014

The annulus between the outer wall of the borehole and the slotted pipe should be filled in with material of a suitable grain size in relation to the size of the annulus (e.g. coarse sand, fine gravel, and or similar material) unless a driven probe borehole drilling technique has been used with associated natural collapse of the formation around the sampling well. The remainder of the hole (generally up to 0.2 m from the ground surface) should be sealed with an impermeable plug (bentonite grout/bentonite cement, etc.), while the upper 1.2 m from the ground surface should be sealed with concrete or mortar, which should support a cover.

Monitoring well pipes should be sealed when not in use. Where practicable, a tap should be fitted, although a bung or similar device may be used.

Monitoring wells should be provided with sufficient protection to prevent tampering and vandalism. Suitable measures can include the installation of a lockable cover (e.g. stop-cock cover) set in concrete. Where possible, pipes should terminate above ground level as this prevents flooding and makes them easier to identify (this might not be possible on sites with public access).

Figure 10 **Example monitoring well construction for collection of ground gas samples for VOCs analysis**

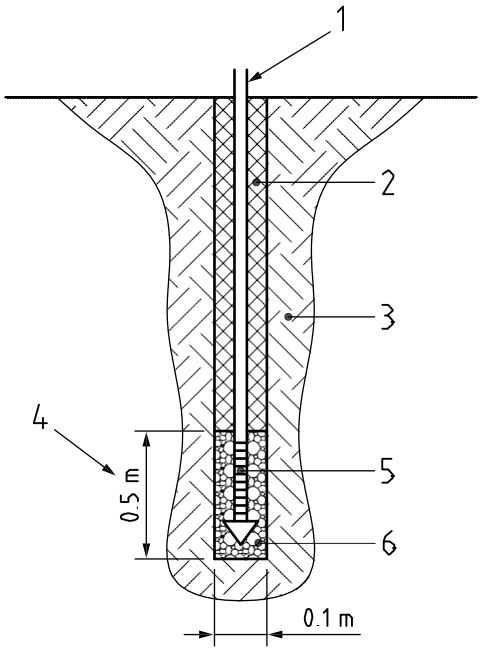

Key

1 Monitoring tube
2 Bentonite seal
3 Clay – rich soils
4 Screened horizon
5 Response zone
6 Permeable fill

This figure is based on CIRIA C682, Figure 6.1 [5].

NOTE 1 The screened horizon can be as small as 0.15 m in length, but rarely exceeds 0.5 m, allowing targeted sample collection from a defined horizon.

NOTE 2 The well diameter can be as small as 0.006 m (6 mm), but may be larger depending on the method used to install the monitoring well. It is prudent to select a method of borehole progression which limits ground disturbance and provides a narrow diameter borehole which can be readily sealed.

NOTE 3 The example is shown for clay-rich soils, but the same design can be used for other geologic conditions.

Bought by- Jonathan Tingley, Company - Geo-Environmental Services Ltd, on 13 March 2014 Latest version. Not to be distributed/networked. For multi-user access www.bsigroup.com/license © The British Standards Institution 2014

10.2.4 Preparation of monitoring wells for sampling VOCs

Sufficient time should be allowed for the ground gas regime to re-equilibrate following installation of the sampling point and for any seal used to become effective.

NOTE 1 Different installations in different formations results in variable times for conditions to re-equilibrate. The American Petroleum Institute [30] provides guidance on calculations which can be undertaken to estimate the time for re-equilibration to take place, but states that experience shows that direct-push probes appear to cause minimal disturbance of the ground gas profile meaning that samples can be collected soon after installation.

An installation leakage test (e.g. placing a shroud over the installation and introducing an indicator compound to allow above ground air entrainment to be detected during sampling) should be completed prior to collection of the first sample to provide confidence that atmospheric entrainment will not occur, thereby diluting the sample with a second source of air.

NOTE 2 Atmospheric entrainment is recognized as a factor which can impact upon the validity of the data collected. Causes of atmospheric entrainment are described further in Annex I, alongside different methods which may be used to undertake a leakage test.

The monitoring point should be purged through extraction of gas prior to sampling to ensure that stagnant air in the monitoring system is not sampled in place of ground gas representative of the unsaturated zone conditions.

NOTE 3 Measurements of O_2 and CO_2 while pumping in the well can give information on the airtightness of the well. If these compounds are analysed at concentrations similar to ambient concentrations, there might be some leakage in the sealing, or preferential pathways connecting with the ambient air.

10.3 Construction of near-surface monitoring ports to sample VOCs in ground gas

10.3.1 General

Ground gas near-surface monitoring ports to enable collection of gas samples from beneath hardstanding (near-slab sampling point) or beneath a foundation structure (sub-slab sampling point) should be installed by drilling a hole in the hardstanding or foundation slab through which the sampling port can be installed.

NOTE 1 These are permanent sampling ports.

NOTE 2 Near-slab monitoring ports allow collection of ground gas directly beneath an area of hardstanding. They can provide information about the migration of VOCs in the subsurface. They can be used to target the migration pathway between the source and receptor, typically a building, and do not require entry into the building.

NOTE 3 Sub-slab sampling ports also allow collection of ground gas samples for VOCs analysis directly beneath a building, which is of particular interest when the source is believed to lie beneath the building.

10.3.2 Monitoring hole formation

A narrow diameter hole should be formed through the hardstanding or foundation, typically using a hand-held drill. The whole of the slab should be penetrated until a small void is advanced approximately 0.05 m deeper than the base of the slab.

NOTE 1 The hole diameter depends on the dimensions of the monitoring port (i.e. the tube through which gas is extracted), but the hole does not typically have a diameter greater than 0.02 m.

Bought by- Jonathan Tingley, Company - Geo-Environmental Services Ltd, on 13 March 2014 Latest version. Not to be distributed/networked. For multi-user access www.bsigroup.com/license © The British Standards Institution 2014

NOTE 2 Prior to drilling the hole, an appropriate evaluation of the hardstanding/foundation and sub-surface conditions helps to minimize the potential for damage to underlying materials, such as underground services or a pre-existing ground gas management system such as a low permeability membrane. Such protective systems might be present both beneath buildings and beneath areas of hardstanding such as car parks.

NOTE 3 It is important to understand what gas is being sampled, for example whether a sub-slab monitoring port penetrates foundations underlain by a sub-floor void or whether the port will be sampling ground gas in the unsaturated zone.

NOTE 4 It is possible to install a sub-slab monitoring port where carpeting or other floor covering is present, but care should be taken in removing the cover material to allow installation.

10.3.3 Installation of monitoring port

A narrow diameter tube (typically 6 mm to 10 mm) should be inserted into the monitoring hole so that the end of the tube penetrates the underlying ground allowing collection of ground gas samples directly beneath the foundation slab or hardstanding. The tube may be constructed from a number of materials, but should preferably be stainless steel. The tube should be fitted with a bung to prevent debris entering the port during installation, and then placed into the pre-drilled hole. The annulus between the sampling tube and slab should be filled to create a robust seal, for example using cement grout, allowing space at the surface for a cover.

Sufficient time should be allowed for the seal around the ground-sampling port to become effective.

The state of the hardstanding or the slab next to the monitoring port should be inspected to determine whether potential preferential pathways such as cracks, etc. are present.

If preferential pathways are identified near the monitoring well, they should be sealed before sampling begins.

The tube material should be selected with reference to the types of VOCs known, or suspected, to be present, to mitigate the risk of sorption to the monitoring port or other interference effects.

NOTE 1 The monitoring port can be checked following installation by passing a wire through the tube to check for blockages.

NOTE 2 The sealing around the monitoring port is crucial not only to prevent atmospheric entrainment during sampling, but also to prevent the port itself acting as a preferential pathway for ground gases to migrate to the surface or gases present in the surface to migrate down into the subsurface. A bung or cap is used to seal the monitoring tube between monitoring events.

10.3.4 Preparation of the monitoring port for sampling

An installation leakage test (e.g. placing a shroud over the installation and introducing an indicator compound to allow above ground air entrainment to be detected during sampling) should be completed prior to collection of the first sample to provide confidence that atmospheric entrainment will not occur, thereby diluting the sample with a second source of air.

10.4 Installation of a flux box to sample VOCs in ground gas

The use of flux boxes for measuring methane surface emissions as described in **9.2.6** (see EA Guidance LFTGN07 [24]) is not appropriate for the measurement of VOCs since this method is for measuring atmospheric emissions of methane from a landfill and not VOC measurements for human health/exposure or risk assessment purposes.

Bought by- Jonathan Tingley, Company - Geo-Environmental Services Ltd, on 13 March 2014 Latest version. Not to be distributed/networked. For multi-user access www.bsigroup.com/license © The British Standards Institution 2014

10.5 Instruments for on-site use

Different instruments measure a range of different VOCs over variable concentration ranges, and each has its own advantages and limitations. The user should have a good understanding of gas monitoring equipment and which type should be used in a given situation.

NOTE 1 The instruments required depend upon conditions at specific sites; it is therefore not appropriate to specify specific instruments in this standard.

NOTE 2 In Table 6, the operational advantages and disadvantages of several portable instruments, along with the gases analysed, are given.

NOTE 3 Field testing is frequently non-specific, and semi-quantitative and with high detection limits (e.g. parts per million [ppm]), for example, using total flammable gas detectors and photoionization detectors. Such field testing can provide useful data regarding the presence of VOCs and relative concentrations, but it is not advisable to use it to provide a quantitative estimate of the concentration of VOCs in ground gas. Field gas monitoring (including data logging facilities) equipment is available for well head or down-hole installation, but the monitoring point needs to be designed to allow for such testing to be carried out.

Table 6 **Portable equipment to measure VOCs in ground gases**

Instrument	VOCs analysed	Advantages	Disadvantages
Flame ionization detector	Flammable VOCs	Very sensitive. Good for pinpointing emission sources.	Not always intrinsically safe. Requires oxygen. Responds to any combustible gas or vapour. Sample is destroyed as part of measurement process. Can be affected by extreme weather conditions.
Colorimetric indicator tubes (see Table 3, Note)	Wide range of VOCs	Very easy to use. Wide detection range. Used for large number of gases.	Limited precision and readability. High cross sensitivity.
Photoionization detector (PID)	Wide range of VOCs, depending on lamp used	Detection of various ranges can be excluded. Different exitation energies possible. Intrinsically safe.	Detection not specific. Detector signal depends on connection. Can be affected by extreme weather conditions.
Portable air analyser	Wide range of VOCs	Semi-quantitative – good detection limits. Can detect specific compounds.	Higher cost. Calibration process can be complex.
Gas chromatograph (portable) (GC) and portable mass spectrometer (MS)	VOCs including methyl mercury and similar volatile organometallic compounds	Semi-quantitative – higher level of accuracy. Individual compound quantified.	Limited battery life. Relatively high cost. Higher user knowledge to operate.

Bought by- Jonathan Tingley, Company - Geo-Environmental Services Ltd, on 13 March 2014 Latest version. Not to be distributed/networked. For multi-user access www.bsigroup.com/license © The British Standards Institution 2014

10.6 Recording information when monitoring or sampling

When on-site measurements are to be made or samples taken for laboratory analysis, at least the following should be recorded to aid data interpretation:

- the results of instrument checks;
- weather conditions (temperature, pressure, wind, rainfall) for at least three days before, during, and after the monitoring event;
- the state of the ground (dry, wet, covered with snow, etc.); and
- activities that could affect the measurements made or samples taken, e.g. dewatering from nearby excavations or tidal effects on groundwater levels.

In addition, any of the following that are appropriate to the type of installation and the circumstances of the investigation should be recorded:

- atmospheric pressure for the preceding several days (to show the change, if any, in pressure);
- pressure in, and gas flow from, the monitoring well (if determined);
- gas concentrations (VOCs and permanent gases);
- water level in the monitoring well;
- depth to the base of the monitoring well;
- condition of the monitoring well, diameter and depth of response zone;
- visible or audible indications of gas migration from or around the installation (e.g. hissing sounds);
- any unusual odours in or around the monitoring installation;
- any signs of settlement or vegetation distress around the well;
- evidence of condensation inside the well for each set of readings;
- wind speed and direction;
- whether the gas tap (if fitted) has been left open or closed since the last visit (it should have been closed);
- the results of leak test if required (this should be carried out after measuring flow rates and borehole pressure);
- ambient gas concentrations;
- well temperature (if required);
- ambient temperature;
- atmospheric pressure.

NOTE Measurement of the oxygen and carbon dioxide concentrations in ground gas can provide a useful indicator as to what microbial process activity could be active in the subsurface, and how these might change throughout the vertical profile of the unsaturated zone if recorded at multiple depths. The Energy Institute publication "Soil Vapour Protocol for Assessing Hydrocarbon Sites in the UK" [31] describes the importance microbial activity can have on the presence of VOCs and their concentration in ground gas, in particular for VOCs which undergo more rapid biodegradation in aerobic conditions.

Data should be collected (and hence recorded) in an order that does not compromise the quality or value of the data.

Bought by- Jonathan Tingley, Company - Geo-Environmental Services Ltd, on 13 March 2014 Latest version. Not to be distributed/networked. For multi-user access www.bsigroup.com/license © The British Standards Institution 2014

10.7 Making on-site measurements

Any instrument used in the field should be calibrated and achieve appropriate limits of detection. In addition, the limitations associated with the sampling point installation should be clearly understood (see Table 5).

Monitoring ports should be prepared as described in **10.3.4** before any measurements are made. There should be no water in a monitoring port when measurements are made. If water is present, the measurements will not be representative.

Where portable instruments are used, they should be connected securely to the sample point.

When taking a gas measurement from a monitoring point or port, a length of tubing (sample line) is usually required to connect the installation to the gas analyser. This should be kept to a minimum, in general no more than 1 m. Care should be taken when selecting sample lines, as certain compounds can be adsorbed onto them. Nylon tube offers advantages in this respect but care should be taken to provide a good seal with the instrument. Dedicated tubing should be used for each monitoring location.

NOTE 1 For example, polyvinyl chloride (PVC) absorbs water vapour and might release it in a dry air stream. A column of drying agent might need to be placed along the sampling line to prevent the moisture contained within the ground gas from damaging the instrument.

Consideration should be given to the type of drying agent used, as this can affect readings (see **9.5.1**).

NOTE 2 Measurement of ambient gas concentrations provides a check on the correct functioning of instruments and, in the case of VOCs, background concentrations. The latter might be important when the investigation is on a site where VOCs are likely to be present in the atmosphere (e.g. fuel service stations).

10.8 Sampling for laboratory measurements

10.8.1 General

Monitoring ports should be prepared as described in **10.3.4** before samples are taken. There should be no water in a monitoring port when samples are taken. If water is present, the measurements will not be representative.

Ground gas samples for VOCs analysis can be taken using a variety of methods. Equipment for collecting gas samples is often quite specialized and requirements should be clearly understood and advice on sampling requirements and procedures obtained from the test laboratory before use.

Samples may be taken using active sampling or passive sampling methods. The former is generally preferable.

NOTE 1 Active sampling involves either collection of a small volume of gas, or sorption of VOCs onto a sorbent medium and subsequent de-sorption in the laboratory to allow analysis. The sorbent medium is contained within laboratory-prepared tubes or similar devices and the ground gas passed through the tube using a pump.

NOTE 2 In passive sampling, a sorbent medium is exposed to a gas for a period of time, and VOCs are adsorbed through diffusion or permeation alone. Passive sampling for VOCs in ground gas can be used, typically through burial of a passive sampler within the ground, although suspension of a passive sampler to target a subsurface void (e.g. within a sub-floor void) or monitoring well may also be undertaken dependent on the objectives of the investigation.

Bought by- Jonathan Tingley, Company - Geo-Environmental Services Ltd, on 13 March 2014 Latest version. Not to be distributed/networked. For multi-user access www.bsigroup.com/license © The British Standards Institution 2014

10.8.2 Active sampling

10.8.2.1 General

Care should be taken so that atmospheric entrainment through the above ground sampling train does not occur. A range of tests can be carried out prior to and/or during sampling to document that atmospheric entrainment is not occurring (see Annex I).

Gas samples should either be analysed directly using appropriate instrumentation, or absorbed into liquids, or adsorbed on to solids prior to analysis or identification of individual constituents, in the laboratory. The adsorption/desorption method can introduce bias (for example, by incomplete recovery of the vapour), so account of this should be taken when reporting results.

NOTE 1 Collection of a small volume of gas, which might take only a few minutes, results in data relating to the ground gas quality at the point in time when the sample was collected. Sampling using a sorbent medium is likely to take a greater length of time, for example a number of hours and provides a time-averaged view of the ground gas quality over the sampling period. Equipment is available to sample for short periods at fixed intervals over an extended time period. Sampling duration needs to be consistent with the conceptual model, the exposure mechanism and possible temporal effects. Sampling trains are available for sampling into canisters over different time periods (e.g. one hour, three hours, eight hours or one week). It is important to note that the size of the sample might affect the detection/reporting limit of the laboratory method.

NOTE 2 Whatever method is used to collect the gas sample, it is vital that there are no leaks in the sampling system that could draw gas into the sampling chamber from the surrounding air as this might give erroneous results.

NOTE 3 There is a wide range of sampling containers and adsorbent devices that can be used to collect ground gas samples for VOCs analysis (see Table 7).

NOTE 4 Different sample containers and adsorbent devices are prepared in different ways.

NOTE 5 Attention needs to be paid during active sampling to the effects of high humidity on instruments and adsorbent devices, for example, condensation in cells and poor recovery, saturation of some types of sorbent, blocking of cold traps used for GC analysis.

Bought by- Jonathan Tingley, Company - Geo-Environmental Services Ltd, on 13 March 2014 Latest version. Not to be distributed/networked. For multi-user access www.bsigroup.com/license © The British Standards Institution 2014

Table 7 **Containers and adsorbent devices for sampling ground gas for VOCs analysis**

Container/adsorbent device	VOCs analysed	Advantages	Disadvantages
Sampling bags	Wide range of VOCs	Wide range of bags available. Lightweight. Quick.	Requires pump to draw gas into bag. Often fragile and easily punctured. Difficult to store and transport once full. Potential for interaction/sample loss for some bags.
Pressurized containers	Wide range of VOCs	Easy to use. Robust. Low detection levels possible. No pump requirement/limited above ground sampling chain.	Higher cost. Heavier than other containers. Less readily available.
Glass or stainless steel sampling tubes	Wide range of VOCs	Relatively easy to use. Sample collected using manual pump. Quick.	Limited sample size. Higher detection limits.
Sorbent tubes	Wide range of VOCs	Small. Can be used to collect an active or passive sample (if buried). Low detection limits possible. Provide time weighted average (TWA) concentrations.	Relatively large above ground sample train. Breakthrough testing required to make sure sorbent not saturated. Calibrated pump required for active sampling.
Passive diffusion devices	Wide range of VOCs	Can provide time integrated data which might be appropriate and economic for some purposes. Time-averaged sample collection.	Uncertainty associated with accuracy of analysis.

This table has been adapted from part of Table 6.21 in CIRIA C682 [5].

NOTE Sorbent tubes, sometimes called Automatic Thermal Desorption (ATD) Tubes, contain a selected adsorbent such as porous polymer or activated carbon.

Bought by- Jonathan Tingley, Company - Geo-Environmental Services Ltd, on 13 March 2014 Latest version. Not to be distributed/networked. For multi-user access www.bsigroup.com/license © The British Standards Institution 2014

10.8.2.2 Using sample containers

Sample containers should be provided ready to use in the field, having undergone appropriate de-contamination and preparation procedures by the manufacturer, supplier or laboratory. Where there is evidence that the sample container is not appropriately prepared, it should not be used to sample ground gases.

Sampling bags should not be damaged or show signs of wear and tear (they are often suitable for one sampling event only).

Pressurized containers should be checked on receipt to confirm that the container pressure has been maintained at the preparation level during transport.

All containers which could be susceptible to cross-contamination during transport (i.e. all those except the pressurized containers) should be stored and transported in a manner which will minimize the potential for cross-contamination to occur.

NOTE 1 A simple and widely used method of collecting gas samples is to use sampling cylinders pressurized by the user. A hand pump is used to compress the sample into a small cylinder made from either aluminium alloy or preferably stainless steel. The cylinders can vary in capacity from 15 mL up to 110 mL. Another method is the use of a gas sampling vessel, which can be sealed at both ends by taps or valves. The vessel is connected to the sample point with a vacuum pump or hand aspirator in-line to provide suction. Gas should be drawn through the vessel until at least three to five changes of the vessel volume have passed through.

NOTE 2 If using a sampling bag to collect a ground gas sample for VOCs analysis, it is necessary to consider the limitations associated with the method, and care taken not to lose any sample during transport to the laboratory (e.g. puncturing, use of an inappropriate bag material which is semi-permeable to some constituents).

10.8.2.3 Using sorbent tubes

When sampling using a sorbent tube, breakthrough testing (see Note 3) should be undertaken for at least one monitoring point during the initial sampling visit. Where possible, the breakthrough test should be carried out on the monitoring point, or points, with the highest known or suspected VOCs concentrations in ground gas.

Sorbent tubes should be checked on receipt to confirm that the bolts cannot be removed by hand, otherwise cross-contamination might have occurred during transport.

Humidity can severely reduce the adsorption capacity of some sorbents. To evaluate and prevent this effect:

- the temperature and humidity levels of the gas to be sampled should be determined to see if a moisture trap or drying agent should be used in advance of the sorbent tube;
- hydrophobic adsorbents should be used when practical;
- sample tubes should not be at a lower temperature than the sampled gas to avoid condensation forming in the sorbent tubes or associated connecting pipework.

The type of moisture trap or drying agent used should be selected with care (see **9.5.1**).

If analysis is to be carried out for active sulfur compounds (e.g. organosulfur compounds such as mercaptans [thiols] and hydrogen sulfide), steel adsorption tubes, steel containers, and steel tubing in instrumental set-ups should be internally coated to prevent the sulfur compounds being adsorbed or reacting with the steel, possibly being degraded.

Bought by- Jonathan Tingley, Company - Geo-Environmental Services Ltd, on 13 March 2014 Latest version. Not to be distributed/networked. For multi-user access www.bsigroup.com/license © The British Standards Institution 2014

NOTE 1 When sampling using a sorbent tube combined with a pump, the pump is placed at the end of the sampling train and forces air through the sorbent tube at a low flow rate. The flow rate and sampling time period combined dictate the laboratory detection limit which can be achieved. If an insufficient flow rate or sampling time is used, there is the potential for an increased laboratory detection limit as insufficient sorption of the VOCs to the sorbent medium will occur. Conversely, if too great a flow rate or sampling time is used, the sorbent medium might become saturated early in the sample collection process. Therefore, the flow rate and sampling time depends on site conditions, the expected concentrations of VOCs in the ground gas and the detection limit required. Flow rate is also a function of the geology. In tight (e.g. clayey) soils, a lower flow rate needs to be used (compared with granular soil) to minimize the potential for VOC desorbtion (since the VOC concentration in the soil pores space is required) and atmospheric air entrainment into the sample. See "A case study of soil-gas sampling in silt and clay-rich (low-permeability) soils" [32]. The flow rate is typically between 20 mL/minute and 200 mL/minute (see API publication [30]) but can be higher depending on the mass and nature of the sorbent. The time period for sample collection using this technique is not dictated by the overlying land use (e.g. occupation period of a commercial versus residential period) as is the case for air sampling, rather, it relates to the desired laboratory detection limit for the VOCs in ground gas. It is necessary to calibrate the pump rate prior to starting the sampling and make a check on completion that the pump rate has not altered. The time at the start and completion of sampling needs to be noted and provided to the laboratory if quantitative analysis of mass of VOC per m^3 air is required.

NOTE 2 On-site measurement of VOC concentrations during purging and prior to sample can be helpful in deciding on the volume of gas sample to be collected or sampled.

NOTE 3 Breakthrough testing comprises joining two sorbent tubes in series, as close together as possible, before undertaking sampling, or using adsorbent tubes including a front section and a back section. Subsequent laboratory analysis is carried out on both the front tube (closest to the sampling point) and back tube (closest to the pump).

If one or more VOCs are detected on the back tube (or back section) at a mass higher than 5% of the mass detected on the front tube (or front section) for one or more VOCs, the front tube is deemed to have been over-saturated with the potential that the analysis will under-predict the concentration of VOCs present in the ground gas (see USEPA publication [33]). Repeat sampling is needed, using either a lower flow rate and/or lower sampling time to demonstrate that tube saturation is not occurring.

NOTE 4 Care needs to be taken to select an appropriate sorbent medium if this is the method of sampling. There is a range of different sorbent materials (such as carbon molecular sieve, graphitized carbon or porous polymer), typically contained within a stainless steel tube. Dual sorbents may be used within a single sample tube (dual bed tubes) to allow simultaneous sampling of different VOC types (e.g. low and high volatility compounds). Further details on different types of sorbents and selecting an appropriate sorbent are provided in BS EN ISO 16017-1 and BS EN ISO 16017-2, but the laboratory undertaking the chemical analysis might also be able to provide advice as to which is the more suitable medium for the VOCs known or suspected as being present.

NOTE 5 When several sorbent tubes are needed, it is advisable to use one pump per tube, or to use flow regulators to be able to control the flow rate passing through each tube accurately. The flow rate needs to be controlled for all the tubes individually, and the total flow rate also needs to be controlled to check the coherence with the sum of the flow rates of each sorbent tube.

Bought by- Jonathan Tingley, Company - Geo-Environmental Services Ltd, on 13 March 2014 Latest version. Not to be distributed/networked. For multi-user access www.bsigroup.com/license © The British Standards Institution 2014

The flow needs to be measured on the complete sampling line (to integrate all the pressure loss like the ground permeability) at least at the beginning and at the end of the sampling. If the flow rate fluctuates by more than 5% (see BS EN 1232) between the beginning and the end of the sampling, the sampling will not be considered representative.

It is advisable to place the flow-meter after the sorbent tubes on the sampling line to avoid cross contamination and, in the case of a soap bubble flow-meter, to avoid humidity transfer from the flow-meter to the sorbent tubes.

10.8.3 Passive sampling

Passive sampling should only be carried out taking into account the documented limitations of the method (see C683 [5], *Vapor intrusion pathway: a practical guideline* [34] and *Quantitative passive diffusion – adsorption sampling techniques for vapour intrusion assessment* [35]).

NOTE 1 The use of passive sampling is the subject of active research in the UK and elsewhere. Recent research (see [35]) has shown qualitative passive samplers can provide useful data for vapour intrusion assessments under some circumstances. There are different strengths and weaknesses apparent for different samplers under different conditions and for different chemicals.

NOTE 2 Limitations include the need for robust understanding of the volume of gas which passes through the passive sampler whilst in the ground, which is needed to fully quantify the concentrations of VOCs present.

NOTE 3 Passive diffusive samplers also have some potential limitations relative to the current conventional sampling methods (see [35]).

a) Starvation effect: If the air to which the sampler is exposed is stagnant, the sampler might remove VOC vapours from the air faster than they are replenished, in which case, the sampler itself imposes a reduction in the concentrations it is intended to measure. This is referred to as the "starvation effect", and it depends on the uptake rate of the sampler and the face velocity past the sampler.

b) Saturation/Competition: If passive samplers are exposed to high concentrations for extended periods of time, the adsorbent media might become saturated, in which case, the uptake rate might diminish, or more strongly adsorbed compounds might displace less strongly adsorbed compounds (i.e. competition for adsorptive sites), which could impose a bias on the concentration measurements. This can be managed if there is some advance information of expected concentrations (e.g. via field screening or historical data).

c) Matching adsorbent media to target compounds: Different chemicals have different adsorption coefficients, and a variety of adsorbent media are available, so it might be necessary to match the adsorbent to the compounds of interest to provide a high degree of retention during sampling, and good recovery during analysis. It might not be practical to design a single passive sampler suitable for the range of vapour intrusion investigations. This is similar to the challenges of conventional active ATD tube sampling methods.

NOTE 4 Passive sampling can be used to detect and map plumes of VOCs in deep aquifers – adsorption of vapours over a prolonged period of time enables detection of very low concentrations which might not be detectable with short-term active monitoring.

10.9 Storage and transport of samples for laboratory analysis

The collected samples should be clearly labelled with the date, sampling time (including start and finish time) and location.

Once collected, samples should be analysed as soon as possible within the determined time period.

Bought by- Jonathan Tingley, Company - Geo-Environmental Services Ltd, on 13 March 2014 Latest version. Not to be distributed/networked. For multi-user access www.bsigroup.com/license © The British Standards Institution 2014

NOTE 1 When defining the method of storage and transport of samples for laboratory analysis, consideration of the potential for cross-contamination during transport alongside an appropriate storage temperature is important.

*NOTE 2 Transportation of diffusive samplers is dealt with in BS EN 13528-3:2003, **7.4.5**, which states:*

a) Avoid exposure to high temperatures during transit, e.g. in the boot of a car;

b) If possible, keep the samplers at low temperature, low humidity and away from contamination sources e.g. fuels, but avoiding condensation on the sample.

Ensure that adequate sample blanks are transported with the samples so that any of the above problems can be identified.

NOTE 3 When identifying sorbent tubes, it is recommended not to use markers, adhesive or labelling stickers, to prevent contamination of the sorbent with the glue of the stickers, or the solvents in the markers, in particular on sorbent tubes analysed by thermal desorption.

11 Monitoring and sampling reports

A report should be prepared following each monitoring or sampling event.

NOTE 1 The requirements outlined in BS 10175 apply in general to ground gas monitoring and sampling reports. These are usually included in the report of the investigation.

For each measurement made or sample taken, the following information should be provided as appropriate:

- location;
- photos or video;
- date and time of sampling/measurement(s);
- who took the sample;
- pressure differences;
- sampling depth;
- gas flow rates;
- gas concentrations;
- instrument(s) and technique(s) used;
- atmospheric pressure on the day of sampling and for the three preceding days;
- meteorological conditions at the time of sampling;
- ground conditions, e.g. wet, water-logged, dry with vegetation showing no signs of stress, cracks in the soil;
- details of leak tests and calibrations carried out on site;
- details of any works nearby that could affect the readings (e.g. excavation, dewatering, etc.);
- the nature of the ground at each location (if known);
- expected gas concentrations (as information for subsequent laboratory analysis) or results of direct measurements;
- for laboratory analysis, time and conditions of transport and storage.

Bought by- Jonathan Tingley, Company - Geo-Environmental Services Ltd, on 13 March 2014 Latest version. Not to be distributed/networked. For multi-user access www.bsigroup.com/license © The British Standards Institution 2014

NOTE 2 For near-surface sampling, or for collection of samples from the unsaturated zone which might be affected by atmospheric conditions, atmospheric pressure on the day of sampling and for the three preceding days can be presented as this might impact upon the data evaluation.

12 Quality assurance

*COMMENTARY ON CLAUSE **12***

Quality assurance comprises all those measures taken to ensure that results of the investigation are fit for purpose, including documentation, procedures to be followed, the setting of data quality objectives (i.e. for type, quality and quantity) and reporting.

12.1 General

Quality control and assurance procedures should be integrated within the sampling plan and should include:

- preparation of a sampling plan and confirmation that it has been followed or any deviations properly authorized and justified;
- procedures to be followed in the field;
- use of standardized field reporting forms;
- calibration and use of instruments;
- testing of gas sampling and storage devices for gas-tightness;
- checking of instruments whilst in use for changes that might affect measurement results (see **12.2**);
- taking samples for quality control purposes;
- interpretation of the results obtained on samples taken for quality assurance purposes;
- chain of custody requirements.

12.2 Field checks on instruments

Instruments used should be checked regularly to avoid, e.g.:

- exhaustion of water vapour traps;
- decreasing electric power from batteries influencing readings;
- possible influences on readings caused by inclination of instruments while in use; and
- undesired turning of calibration screws.

When deviations from predetermined procedures are observed, the actions to be taken should be specified prior to sampling.

12.3 Calibration of instruments

All relevant equipment should be calibrated and demonstrated to meet the calibration specifications prior to use.

NOTE 1 There are a number of reasons for this.

a) Portable gas analysers have a tendency to drift over time.

b) Some instrument types have a limited life and can fail suddenly without warning.

c) Pumps might not maintain the calibrated pump rate over a long period of time.

Bought by- Jonathan Tingley, Company - Geo-Environmental Services Ltd, on 13 March 2014 Latest version. Not to be distributed/networked. For multi-user access www.bsigroup.com/license © The British Standards Institution 2014

d) Some ground gases contain trace gases that can poison the monitoring equipment.

Instruments used to monitor permanent gases should be calibrated using a gas mixture(s) containing an appropriate concentration(s) of the gas in question and nitrogen or other non-detectable inert gas. More complex mixes of gases can also be used to check performance before going to the field.

NOTE 2 Mixtures of gases of known composition can be obtained from the suppliers of industrial gases.

NOTE 3 The frequency of calibration depends on how regularly the instrument is used. Advice on how to carry out calibration is provided with the instrument.

Regardless of whether the calibration is performed off-site or on-site, all calibration data should be recorded and made available on request.

NOTE 4 Off-site calibrations are not suitable for instruments recording changes during transportation.

Regular servicing should be carried out according to the manufacturer's recommendations.

12.4 Chain of custody

NOTE This process details the links in the transfer of samples between the time of collection and their arrival at the laboratory. Several transfers can take place in this process.

Details of each transfer should be recorded on a chain of custody form. The minimum information that should be included on the form is:

a) name of the person transferring the samples;

b) name of the person receiving the samples;

c) time and date that samples are taken;

d) time and date that samples are received by the laboratory;

e) name and contact details of the client;

f) details of the site(s);

g) details of the samples (location, depth, etc.);

h) analytes to be determined;

i) other specific instructions in the handling of the samples during analysis, e.g. special safety precautions;

j) samples that are expected to contain high levels of the analyte in question or other substances that can interfere with the analysis;

k) testing turnaround times required in the laboratory.

12.5 Quality control samples

12.5.1 General

In accordance with the data quality objectives of the sampling and investigation programme, consideration should be given to implementing each of the quality control procedures described in **12.5.2** to **12.5.7**.

NOTE Quality control samples for laboratory analysis are taken in addition to the primary measurement samples to indicate the quality of the sampling programme. They provide information which ideally permits any errors due to possible cross-contamination and inconsistencies in sampling to be discounted and provide checks on the analytical techniques used.

Bought by- Jonathan Tingley, Company - Geo-Environmental Services Ltd, on 13 March 2014 Latest version. Not to be distributed/networked. For multi-user access www.bsigroup.com/license © The British Standards Institution 2014

12.5.2 Ambient air check samples

Samples of ambient air should be taken during each monitoring round from a position upwind of the sampling location(s).

12.5.3 Blind replicate samples

NOTE Blind replicate samples can be used to identify the variation in analyte concentration between samples collected from the same sampling point and/or the repeatability of the laboratory's analysis.

At least one set of blind samples should be collected during each monitoring round. If more than 20 samples are taken during the monitoring round, one set of blind samples should be taken for every 20 samples. The blind samples should be removed from the same sampling point in a single operation, using a y-splitter, t-splitter or equivalent, and divided into two vessels. These samples should be submitted to the laboratory as two individual samples and no indication given that they are duplicates.

12.5.4 Split samples

NOTE Split samples provide a check on the analytical proficiency of the laboratories.

At least one set of split samples should be collected during each monitoring round. If more than 20 samples are taken during the monitoring round, one set of split samples should be taken for every 20 samples. The samples should be removed from the same sampling point in a single operation as described in **12.5.3**. One sample from each set should be submitted to a different laboratory for analysis. The same analytes should be determined by both laboratories, using identical analytical techniques.

12.5.5 Trip blanks

NOTE 1 Trip blanks are used to detect cross-contamination of samples during transport.

A container or sorbent cartridge or other collection medium, identical to the ones being used for the samples, should be sealed as for a real sample, placed with the samples and transported back to the laboratory. The blank is then analysed along with the collected samples.

NOTE 2 A trip blank is not required when using a pressurized canister, as no gas is present to enable the analysis to be carried out.

12.5.6 Other quality control samples

Other quality control samples that should be considered include field blanks, field spikes, and resubmission of a previously analysed sample to the same laboratory or to a different laboratory.

12.5.7 Evaluation of quality control sample results

The analytical results and quality control data should be evaluated following recognized procedures to allow the interpretation of accuracy, precision and representativeness of the data. Typical variations which can be expected from acceptable quality control samples are shown in Table 8.

Bought by- Jonathan Tingley, Company - Geo-Environmental Services Ltd, on 13 March 2014 Latest version. Not to be distributed/networked. For multi-user access www.bsigroup.com/license © The British Standards Institution 2014

Table 8 **Acceptance criteria for quality control samples**

Quality control samples	Minimum number of samples	Typical relative percent difference (RPD) for quality control samples A), B)
Blind replicate sample	One per monitoring round and then one per 20 samples collected	30% to 50% of mean concentration of determinand
Split sample	One per monitoring round and then one per 20 samples collected	30% to 50% of mean concentration of determinand determined by both laboratories C)
Trip blank	One per box used to contain samples	The significance of the trip blank results should be evaluated in terms of those obtained for the actual field samples

A) The relative percent difference (RPD) is:

$$\left(\frac{\text{Result 1 - Result 2}}{\text{Mean result}}\right) \times 100$$

B) The significance of the RPDs of the results should be evaluated on the basis of sampling technique, sample variability and absolute concentration relative to criteria and laboratory performance.

C) This variation can be expected to be higher for organic determinands than for inorganic and low concentration determinands.

13 Refining the conceptual model

The conceptual model should be reviewed and revised as necessary as the investigation progresses. The report of the investigation (see Clause **14**) should either confirm that the conceptual model remains unchanged from when the investigation was planned or present a revised conceptual model.

NOTE If the original hypothesis was that ground gas was unlikely to be present, this might be confirmed, but in most cases the results of the investigation will result in firmer statements about the actual ground gas conditions to replace the hypotheses in the earlier conceptual model.

14 Report on the investigation

The report on an investigation for ground gas should be in accordance with recommendations on reporting in BS 10175.

Reports should describe the reasons for the sampling and monitoring strategy adopted including, for example, the choice of installation and the method(s) and frequency of sampling and/or measurement.

Bought by- Jonathan Tingley, Company - Geo-Environmental Services Ltd, on 13 March 2014 Latest version. Not to be distributed/networked. For multi-user access www.bsigroup.com/license © The British Standards Institution 2014

Annex A (informative) Regulation of land contamination

*COMMENTARY ON ANNEX **A***

This Annex describes the regulatory regimes and associated guidance available in March 2013. It is provided for information only. The situation might have changed since the Annex was prepared. Readers cannot rely on the Annex to provide a complete account of the current legal position or the relevant guidance and need to make sure that they have up-to-date information.

From 1 April 2013, Natural Resources Wales will subsume responsibility for all areas currently regulated by Environment Agency Wales, Countryside Commission Wales (CCW) and Forestry Commission Wales (FCC). All references to the Environment Agency in Annex A should be read with this in mind.

A.1 General

This annex summarizes the regulatory regimes dealing with land where ground gases are present, with reference to the Part 2A Contaminated Land regime [1], the Building Regulations [36], [37], [38], Department of Communities and Local Government Circulars 07/2010 [39] and 02/2011 [40], and the planning process. These represent the main contexts in which the investigations of ground gas are carried out following the processes set out in BS 10175 and this standard.

This annex is intended to raise the awareness of investigation contractors and consultants commissioned by the site owner or future site developer, to carry out investigations in support of planning proposals or for other reasons:

- about the full purpose of such investigations;
- what the local authority regulators need in order for a reasonable assessment to be made of a planning proposal, an application under Building Regulations [36], [37], [38], or for the potential for regulatory action under Part 2A of the Environmental Protection Act 1990 [1].

The regulatory regimes relating to historic land contamination are listed in the Bibliography. Most important procedural and technical guidance on the application of the regulatory process is given in CLR11 [3].

Of further note is Environment Agency guidance, *Verification of Remediation of Land Contamination* [41].

BS 10175:2011 defines contamination as:

"presence of a substance or agent, as a result of human activity, in, on or under land, which has the potential to cause harm or to cause pollution".

Unfortunately, there is a lack of consistency in the way the terms "contaminant" and "contamination" are used commonly and also in some government legislation and guidance. The distinction between the presence of a substance due to human activity and due to natural processes made in BS 10175 is not always made elsewhere.

It is important therefore, to be careful when using the term and to take proper account of the context. "Contamination" has different meanings under different regulatory regimes; for example for planning purposes, the Building Regulations [36], [37], [38], taxation regulations, and Part 2A of the Environmental Protection Act 1990 [1].

Different standards that might have relevance in a development context also employ different definitions. For example, BS 3882:2007 defines "soil contaminant" as a:

"substance which, when present in excess, can inhibit soil function or cause a risk to animals, plants, humans or the environment".

Bought by- Jonathan Tingley, Company - Geo-Environmental Services Ltd, on 13 March 2014 Latest version. Not to be distributed/networked. For multi-user access www.bsigroup.com/license © The British Standards Institution 2014

A.2 Regulatory regimes and guidance

A.2.1 Part 2A of the Environmental Protection Act 1990

The Act provides a statutory definition of "Contaminated Land". The provisions of the Act are to be applied taking into account the Statutory Guidance issued by the United Kingdom's legislatures.

In Scotland, the guidance is provided in Statutory Guidance Edition 2 (2006) [42] with the English changes described below still under consideration for introduction.

In Northern Ireland, the Part 2A regime has not been introduced. Part 3 of the Waste and Contaminated Land Order (NI) 1997 [43] contains similar provisions to Part 2A, but it has not been implemented. A consultation took place in 2006, but there is no clear timetable at the time of publication of this standard for implementing the regulations. The main route by which land contamination is identified and managed in Northern Ireland is therefore through the planning process and, to a lesser extent, voluntary undertakings by companies with large landholdings, etc.

Revised Statutory Guidance was issued in England [44] and in Wales [45] in 2012.

Containing predominantly the same text, the English and Welsh guidance documents provide supplementary statutory guidance, which local authorities are required to follow, describing the various stages in the regulatory process.

The issues of radioactive contamination have been separated out and new radioactive contaminated land specific statutory guidance has been issued by Department for Energy & Climate Change (DECC) [46] and will shortly be mirrored by the Welsh Government.

A.2.2 Planning

Overall guidance on the application of the planning system in England is provided in the National Planning Policy Framework (NPPF) [47]. With the introduction of the NPPF, Planning Policy Statement 23 (PPS 23) [48], which provided guidance on how to deal with contaminated land within a planning context, was withdrawn. The new Framework requires that all planning applications be given approval unless they can be demonstrated not to be sustainable in accordance with the new and much reduced guidance with reference to thirteen aspects, but not specifically including the problem of contamination. However, contamination is mentioned in a number of paragraphs, e.g. 109, 120, and 121.

Many individual local authorities and a number of groupings of local authorities have produced guidance notes on contamination for those seeking planning permission. It is anticipated that this guidance will be revised as necessary to take account of the changes introduced by the NPPF. In addition, whilst it is anticipated that an alternative revised national guidance for England will be published by another institution or group of institutions which reinstates the good practice developed over many years of development, following the precedent of BS 10175, this annex includes an outline of established technical and procedural practice, based upon the risk based principles of CLR 11 [3].

Guidance on contamination in a planning context is provided in Scotland in Planning Advice Note PAN 33 [49]. In Wales, similar guidance is found in Planning Policy Wales 2011 [50] and the "Land Contamination – Guidance for Developers" published jointly by the Welsh Local Government Association (WLGA), Welsh Assembly Government and Environment Agency [51].

Bought by- Jonathan Tingley, Company - Geo-Environmental Services Ltd, on 13 March 2014 Latest version. Not to be distributed/networked. For multi-user access www.bsigroup.com/license © The British Standards Institution 2014

A.2.3 Building Control

In England and Wales, Building Regulations Approved Document C "*Site preparation and resistance to contaminants and moisture*" [52] deals with the presence of contaminants and their potential effects on proposed occupiers, building materials, the presence of combustible fill, expansive slags, ground gas and radon.

In Scotland, the equivalent regulations can be found in Technical Handbook, Section 3 [53] and, in Northern Ireland, in "Technical Booklets - Site Preparation", published by the Department of the Environment [54].

The Building Regulations for England and Wales are being reviewed at the time of publication of this standard.

A.3 The regulatory process and the regulators

NOTE Many local authorities have designated a "contaminated land officer" (CLO), but others have assigned responsibilities within the environmental health function without designation of an individual as "CLO". For simplicity, this subclause assumes a CLO has been designated.

A.3.1 Part 2A Contaminated Land regime

The Part 2A Contaminated Land regime requires local authorities to inspect their areas to identify land which is contaminated within the meaning of the Part 2A definition, to establish liability and to ensure its remediation.

In England and Wales, the primary regulator is the Local Authority, except where the site is further designated as a "Special Site", e.g. where there are certain cases of unacceptable pollution of controlled waters. In the case of a Special Site, following formal "determination" by the local authority of the site as contaminated land, the Environment Agency becomes responsible for enforcing remediation. Similar arrangements are in place for certain other activities, land uses and for radioactive contamination.

In Scotland, the local authorities are responsible for sites which pose a risk of pollution to the water environment and not just those which focus on human health, i.e. as in England and Wales, not all sites which have significant pollution of the water environment become Special Sites in Scotland.

A.3.2 Planning

The planning process is regulated exclusively by the local planning authority, except for "nationally significant infrastructure projects" and appeals which are dealt with in England by the Planning Inspectorate on behalf of the Secretary of State. Where a site which is the subject of a planning proposal is potentially affected by contamination, technical support is mainly provided to the planners by the environmental health function of the local authority. Many authorities also seek advice on sites proposed for use by sensitive receptors, even in the absence of information suggesting that contamination might be present. This support is usually delegated to the Contaminated Land Officer (CLO) where one has been designated. Consideration of how a developer has assessed the risks to human health and the environment arising from ground gas and VOC emissions are also the responsibility of the CLO. Where there is a requirement for the protection of groundwater or the water environment in the development context, the Environment Agency is approached for advice. Advice is sought on biodiversity issues from Natural England and the Countryside Commission for Wales, when appropriate. Similar arrangements apply in Scotland, with the Scottish Environment Protection Agency (SEPA) being responsible for the regulation of pollution of the "Water Environment".

Bought by- Jonathan Tingley, Company - Geo-Environmental Services Ltd, on 13 March 2014 Latest version. Not to be distributed/networked. For multi-user access www.bsigroup.com/license © The British Standards Institution 2014

NOTE The planning process in Northern Ireland is currently managed through a central government agency within the Department of the Environment: Planning Service; not the local authority. Significant reform of the local authority structure in Northern Ireland is currently under way and some planning functions are expected to be devolved to new local authorities once new boundaries and structures are agreed.

Contamination is a "material planning consideration" under the NPPF, i.e. an inadequate proposal may be refused, and it is the responsibility of the developer to satisfy the Local Planning Authority, advised by the CLO, that any unacceptable risk from contamination identified through an appropriate investigation will be successfully addressed without undue environmental impact before completion of the development.

A similar situation exists in Wales, Scotland and Northern Ireland with reference to meeting the requirements of their particular planning guidance (see **A.2**).

A.3.3 Building Control

The primary regulator in all UK jurisdictions is the Building Control Authority acting with advice from the CLO when appropriate. In some instances, an "approved inspector", often the National House-Building Council (NHBC) in the case of residential developments, may act in the place of the authority.

In some local authorities, the lead on assessing the adequacy of ground gas protection measures, and hence the investigations leading to their selection, is taken by Building Control in consultation with the CLO. Building Control has a duty to inspect and approve work in progress and completed works.

A.4 Investigations in support of planning proposals

Typically, an investigation carried out in accordance with BS 10175 and BS 8576 will be commissioned by the site owner (or future developer), and designed and carried out by a suitably qualified and experienced consultant with a brief to produce the following information to support a planning proposal.

a) A representative characterization of the incidence, levels and distribution of potentially harmful substances of concern (both contaminants and naturally occurring substances), including ground gas and VOC emissions, as identified by the preliminary investigation (desk study and site reconnaissance) dealing with historic site usage, including sufficient information to enable an assessment of risks to be carried out relative to the current and proposed end use. The assessment of risks identified informs the process of option appraisal with reference to the remediation considered necessary for the site to ensure a safe and sustainable development.

b) A further interpretative report, including full details of the risk assessment carried out, the favoured remedial strategy and a method statement.

The factual and interpretative reports are passed to the person (e.g. CLO) acting as advisor to the Planning Authority for consideration. If they prove to be acceptable, a recommendation can be made to the Planning Authority for planning permission to be granted, though sometimes with the imposition of one or more Planning Conditions relating to the achievement of satisfactory remedial action in the process of redevelopment.

When information is not submitted with the application (and sometimes when it is), or when the information supplied is deemed inadequate, conditions requiring preliminary investigation, intrusive investigation and development of a scheme for any necessary remedial and protective measures, and subsequent verification, are commonly imposed. These often require prior approval by the Planning Authority before any works are carried out. There is also often a requirement that, as appropriate, no development can take place until the conditions have been dealt with.

Bought by- Jonathan Tingley, Company - Geo-Environmental Services Ltd, on 13 March 2014 Latest version. Not to be distributed/networked. For multi-user access www.bsigroup.com/license © The British Standards Institution 2014

In these circumstances, early consultation with the local planning authority's CLO is recommended (and other relevant consultees, e.g. the Environment Agency for water pollution risks) to ensure that the detailed investigation strategy is considered adequate to satisfy the needs of the regulator in the process of risk assessment and subsequent remediation.

If the investigation and risk assessment report does not meet the required quality, it might be referred back to the developer with recommendations for further investigation and re-assessment. This can cause delays in the progress of the intended development.

As part of, or on completion of, the remediation works detailed in the agreed remediation scheme or method statement, a further investigation is required to verify that the objectives of the works have been addressed in a satisfactory way and Planning Conditions satisfied.

The verification report, which contains the results of the further investigation amongst other information, is submitted to the Planning Department for acceptance. Failure to carry out the process of verification and to produce the required evidence can lead to serious difficulties in the future transfer of ownership of the development, particularly in the context of residential development. It can also lead to enforcement action by the local authority.

The nature of the responsibilities described in this subclause to be accepted by the developer in consultation with the local authority regulator are confirmed in the text of the NPPF and these proven procedures are considered to be an essential part of the assessment which needs to demonstrate an acceptable level of sustainability for every successful planning proposal.

Similar arrangements are in place in Wales, Scotland and Northern Ireland.

Annex B (informative) Radon

B.1 Background

Radon is a naturally occurring radioactive gas which decays into other radioactive species, all of which cause human exposure to radiation. The main danger from high radon exposure is the increased risk of lung cancer. Its importance lies in the fact that the risks associated with exposure to it are serious and its effects on the human condition are backed by extensive epidemiological information.

Radon-222 (Rn222), which has a half-life of 3.8 days, arises naturally from the minute amounts of uranium that occur in all rocks and soils. The gas can move through cracks and fissures in the subsoil and eventually to the atmosphere. Most of the radon disperses harmlessly into the air outside but some passes through the ground and collects in spaces under or within buildings. Detailed information on radon and its decay products is provided in BS ISO 11665-1:2012, Annex A.

Radon is commonly present in mine gas and can also be released from groundwater when it is extracted from the ground. It can also arise from deposited wastes such as those from the nuclear industry, phosphorus slags, and coal ash. There are published and draft International Standards for investigation and determination of radon in soils (BS ISO 18589 series) and in air (BS ISO 11665-1). The latter provides guidance on analysis of historic records, site reconnaissance, identification of preferential migration pathways and development of a sampling plan (see **B.5**).

Bought by- Jonathan Tingley, Company - Geo-Environmental Services Ltd, on 13 March 2014 Latest version. Not to be distributed/networked. For multi-user access www.bsigroup.com/license © The British Standards Institution 2014

Information and guidance on radon in the environment is available on the Health Protection Agency's web site (www.hpa.org.uk). Site-specific reports on the likely natural occurrence of radon are obtainable via the HPA's web site and from the British Geological Survey (BGS) (www.bgs.ac.uk). These are based on the definitive GIS map sets (BR211 [55] and the Indicative Atlas [56] are not entirely up-to-date).

The HPA published updated advice on radon in 2010 [57].

B.2 Radon in homes

The Health Protection Agency (HPA) recommends that radon levels in homes should be less than 200 Becquerel per cubic metre (Bq/m^3). The HPA has also set a Target Level for domestic properties of 100 Bq/m^3.

The Target Level was introduced because research published since 1990 has given scientists a greater understanding of the risks to health of exposure to radon below 200 Bq/m^3 and because the HPA now has considerably more experience of the effectiveness of remediation measures. Although low level exposures can still lead to lung cancer, the risks at these levels are low and can be reduced further by simple mitigation measures designed to increase underfloor ventilation [57].

The only reliable guide to the level of radon in a building is a measurement over a period long enough to average out short-term variations in radon levels. This should ideally be three months. The procedure recommended by, and offered as a service by, the HPA is to use passive monitors as they are reliable, simple to use and can be sent by post. The individual result for each home is confidential and will not be given to anyone else without the prior consent of the householder at the time of the measurement. This service is available to any householder in the UK. This includes the supply of two radon detectors, their subsequent analysis and the reporting of the result. All packaging and return postage are also included.

There might sometimes be a need for rapid information about radon, for example to test the effect of mitigation work or when planning structural changes to a building. In such cases, screening tests can be helpful provided they are conducted in addition to the standard three-month test. This HPA service provides an early indication of the likely result after only a couple of weeks. As with all short-term measurements, the result will be inconclusive in some cases. In such cases, the second set of detectors, returned after three months, will provide further information and a numerical value. The result is expressed in units that are directly comparable with the Action Level (AL). See Table B.1.

NOTE 1 The Health Protection Agency has recommended to government that a system of an Action Level and a Target Level be used to guide decisions relating to radon reduction. HPA has recommended that the Action Level be 200 Bq/m^3 and that the Target Level be 100 Bq/m^3, expressed as the annual average radon concentration in the home. The role of the Action Level is to assist in the designation of areas of concern for possibly high radon concentrations in new and existing homes and to provide a threshold above which all householders are advised to remediate. The principal role of the Target Level is to provide an objective for remedial action on existing homes and preventative action in new homes [57].

NOTE 2 The measurement services mentioned in this subclause and radon risk reports relating to a property are available on www.UKradon.org, which is the radon services site operated by the Health Protection Agency.

Bought by- Jonathan Tingley, Company - Geo-Environmental Services Ltd, on 13 March 2014 Latest version. Not to be distributed/networked. For multi-user access www.bsigroup.com/license © The British Standards Institution 2014

Table B.1 **Results of screening measurements and conclusions**

Result of screening measurement	Conclusion in relation to the Action Level	Numerical value provided?
Less than 100 Bq/m^3	Unlikely the AL is exceeded	Yes
Between 100 Bq/m^3 and 400 Bq/m^3	Uncertain, need longer test	No
More than 400 Bq/m^3	Likely the AL is exceeded	Yes

B.3 Radon at work

Employers are required by the Management of Health and Safety Regulations at Work 1999 [58], to assess risks from radon in workplaces in radon affected areas. This usually requires a measurement. The Ionising Radiations Regulations 1999 [59] require action to protect employees if the average radon gas concentration exceeds 400 Bq/m^3 in air.

All below ground workplaces require a risk assessment regardless of whether or not they are in an "affected area".

The HPA runs a routine radon monitoring service for employers. This includes processing, a written report of the results and brief advice. Between two and ten monitors are usually sufficient for all but the largest premises. Measurements are normally conducted over three months and monitors are sent to the employer by post with instructions for placement. Monitors are then posted back for processing and reporting.

There are no types of indoor ground floor workplace in which radon can assumed always to be low because of ventilation or working conditions. The number of monitors required for each building depends on the workplace type and use. They need to be placed in the lowest routinely occupied floor and any basement areas. Although the Health and Safety Executive (HSE) indicates that it is not generally necessary to measure above the ground floor, radon can reach upper floors and consideration of these cannot be ruled out.

NOTE 1 The measurement services mentioned in this subclause are available on www.UKradon.org, which is the radon services site operated by the Health Protection Agency.

NOTE 2 The Health and Safety Executive (HSE) recommends that for occupied below ground workplaces (for example, occupied for more than an average of an hour per week/52 hours per year), or those containing an open water source, the risk assessment include radon measurements. This applies to all below ground workplaces in the UK, irrespective of the above ground Affected Areas status.

The Ionising Radiations Regulations 1999 [59] come into effect where radon is present above the defined level of 400 Bq/m^3 and employers are required to take action to restrict resulting exposures. The HSE and Local Authorities are responsible for enforcing these regulations in particular types of workplace.

B.4 Protection against radon in buildings

The Building Research Establishment (BRE) has published a series of guidance documents on the protection of buildings against radon [55], [60–68].

B.5 Measurement of radon in air

Guidance on the measurement of radon in air is provided in BS ISO 11665-1, which describes the origins of radon and its short-lived decay products and associated measurement methods.

Bought by- Jonathan Tingley, Company - Geo-Environmental Services Ltd, on 13 March 2014 Latest version. Not to be distributed/networked. For multi-user access www.bsigroup.com/license © The British Standards Institution 2014

It provides guidance on analysis of historic records, site reconnaissance, identification of preferential migration pathways and development of a sampling plan (see BS ISO 11665-1:2012, **6.1**). BS ISO 11665-1:2012, **6.4.1.1**, states that measurement of ambient air concentrations outside buildings "shall be made between 1 m and 2 m above the supporting surface (e.g. ground)", i.e. the standard is not directly applicable to measurement of gas concentrations in the ground although some of the guidance in the standard might be relevant. BS ISO 11665-7 provides guidance on the measurement of surface exhalation rates.

B.6 Measurement of radon concentrations in ground gas

B.6.1 Behaviour of radon in the ground

Radon is a non-reactive gas that migrates away from the site of its uranium parent by diffusion and advection along joints, faults and intergranular permeable pathways. If the source is below the water table, offset and dilution in moving groundwater disperses the radon plume. Ultimately, radon entrained in groundwater escapes to the unsaturated zone where it joins the flux of ground gas to the surface. The normal range of radon concentration in ground gas is of the order of 1 kBq/m^3 to 50 kBq/m^3 although they can be much higher in areas where uranium-containing materials are present at shallow depths. Radon concentration in groundwater typically ranges from 0.5 kBq/m^3 to 500 kBq/m^3, approximately an order of magnitude higher than in ground gas.

Whether initially dispersed by groundwater transport or added directly to the ground gas above the water table, radon moves under the "pumping" influence of changes in atmospheric pressure, the Bernoulli effect of wind passing over the soil surface, and increases in the water table to finally pass through the soil into the atmosphere. Daily and weekly changes in barometric pressure are an important driver of radon movement. Rainfall events that cause the water table to rise also drive ground gas toward the surface. Wind passing over the soil surface lowers the gas pressure in the upper reaches of the soil creating a gradient for gas flow toward the surface. The extent to which this occurs depends on a variety of factors, including whether the surface is "sealed" by freezing or water logging.

The flow of ground gas to the atmosphere can vary by more than an order of magnitude over the course of a year and by a factor of three or more over the course of a single day. Measurements made in the morning can be quite different from those made in the afternoon at the same location. The worst time to measure soil radon is during daylight hours. Any system that relies on instantaneous or short term measurements (electret ion chamber, scintillation cells, and alpha probes) suffers from inconsistent measurements far more than methods that integrate radon concentration in the soil over many days or weeks.

B.6.2 General methods of measurement

There are established methods for the measurement of radon concentrations in ground gas, although they appear to have been little used in the UK. In addition to being used to assess potential risks to buildings, they are used in earthquake prediction and in uranium prospecting.

To evaluate the significance of such measurements in relation to the potential risks to the occupants of buildings also requires measurements of other factors such as soil permeability. Measurements can vary greatly due to external influences (e.g. atmospheric pressure, soil moisture, etc.) and measurements need to be carried out over a suitable period of time.

Bought by- Jonathan Tingley, Company - Geo-Environmental Services Ltd, on 13 March 2014 Latest version. Not to be distributed/networked. For multi-user access www.bsigroup.com/license © The British Standards Institution 2014

According to some sources (e.g. [69]) the risk from radon in the ground can be best assessed using a parameter that combines the measured concentration with the permeability of the soil, e.g.:

Radon availability (Bq/m) = Concentration (Bq/m^3) × permeability (m^{-2})

In the Czech Republic, there are regulatory requirements for "radon risk classification" whenever new buildings are to be constructed. There is a requirement that measurements are made on a 10 m × 10 m grid in the area of assumed construction (e.g. by taking gas samples with a syringe from a small diameter hollow steel probe inserted to a depth of 0.8 m). When a site with an area of less than 800 m^2 is to be occupied by a single family house, it is recommended that at least fifteen ground-gas sample measurements are made. Permeability also needs to be measured or derived from the soil physical characteristics. The permeability and concentration measurements are combined to derive the "Radon potential (RP)" (this is different from the "Radon availability" mentioned above). There are prescribed methods for evaluating both the radon measurements and the permeability measurements/estimates with the third quartile (i.e. 75 percentile) being particularly important.

Several factors are working for and against detection of uranium at depth by measuring radon flux. The short half-life of Rn222 means that half of the initial Rn222 concentration is lost in the first 3.8 days. The remaining amount is cut in half every 3.8 days until virtually no Rn222 is left. However, Rn222 release from its source is continuous, thus long lasting plumes develop that can be detected. If the travel time of ground gas to the surface is long, this attenuates the radon signal. Meanwhile, ground gas flux is driving atmosphere into the soil and ground gas out on a cycle similar to the tides. A series of successively "higher tide" events where either the daily barometric pressure differential increases or a low pressure air mass is moving into the area is most favourable for radon detection.

The types of instruments and techniques used in the detection of either the alpha particles emitted by radon itself or the alpha particles of its decay products are:

- alpha scintillation detectors such as zinc-sulfide phosphors, or silver activated, ZnS(Ag) powder;
- alpha track-etch detectors or solid state nuclear track-etch detectors (SSNTDs) for registering of nuclear of alpha particles in solid-state materials;
- alpha radiation spectrometers with silicon diode, either surface barrier or diffused junction detectors.

The principle methods of measurements are [70]:

- measurement in a "grab" sample of gas, e.g. for analysis in the laboratory or in the field (e.g. using scintillation cells or flasks) (see **B.6.3**);
- passive integrating methods using for example soil-state nuclear track-etch detectors or charcoal canisters placed in the ground (see **B.6.4.1** and **B.6.4.2**);
- measurement of radon flux from the soil;
- continuous monitoring (see **B.6.4.3**).

The first two are the preferred methods. Specialist equipment for use in the field is commercially available (e.g. in Canada and the USA).

Passive integrating methods allow long-term measurements, but the devices can be affected strongly by soil moisture.

Bought by- Jonathan Tingley, Company - Geo-Environmental Services Ltd, on 13 March 2014 Latest version. Not to be distributed/networked. For multi-user access www.bsigroup.com/license © The British Standards Institution 2014

Measurement of radon concentrations in the field on samples of ground gas extracted from a borehole or similar provides data quickly, but these short-term measurements can vary greatly due to daily, weekly, and seasonal changes in soil and atmospheric conditions that are averaged out during long-term measurements.

Soil-air methods require specialized equipment because soil-air data are sensitive to many conditions and factors, such as the depth of measurement. Radon levels vary widely in the top metre of soil because of variations in soil moisture and the amount of radon that escapes to the atmosphere. Making measurements at 1.0 m or deeper avoids many of the problems related to near-surface conditions.

B.6.3 Measurement of radon by grab sampling

The scintillation cell method is one of the oldest and most widely used for grab sampling of radon and its decay products in the field. Scintillation cells or scintillation flasks range in size from 0.09 L to 3.0 L and they are made by using metal, glass or plastic containers coated internally with silver activated, ZnS(Ag) powder. The bottom of the container in cylindrical form is usually transparent to allow light photons produced in the scintillator to be detected. If the internal coating is very thin, the bottom of the container can also be coated without significant loss of light photons. For counting the light photons, the scintillation cell is coupled to a photomultiplier tube assembly system. An advantage of using a scintillation cell is that it eliminates the need for sample transfer before counting. However, samples from larger containers or from systems that concentrate environmental levels of radon (that from ground gas) by cryogenic processes can be transferred into them for counting if desired.

Ground gas samples are often obtained from holes 0.7 m to 1.0 m deep but there is less uncertainty about the reliability of the measurements when holes deeper than 1.0 m are used. Scintillation cells can be filled by exposing evacuated cells (instantaneous), or by flowing air through at ambient conditions for 1 min to 5 min. "*Application Note AN-005 EN: Quantifying of Radon Concentration in Ground Gas*" [69], which describes a standard procedure for radon measurements in ground gas, recommends that holes 1 m to 2 m deep be employed. In the method described, a spectroscopic monitor is used to measure radon concentrations.

B.6.4 Passive integrating methods of measurement

B.6.4.1 Charcoal canisters

The half-life of Rn222 is 3.8 days, thus methods that rely on radon capture and post deployment measurement (charcoal canisters) only measure the average Rn222 concentration of soil for the last 36 hours they are deployed. Highly variable soil moisture has a significant impact on activated charcoal's ability to adsorb radon. Sampling errors are generally high and can be directly correlated with the delay in post deployment processing or differences in soil moisture between sample points.

B.6.4.2 Solid-state nuclear track-etch detectors

The principle of radon detection by solid-state nuclear track-etch detectors (SSNTDs) is based on the production of alpha particle tracks in solid-state materials, such as cellulose nitrate films and allyl diglycol carbonate plastic films.

The best method for use in soil surveys is filtered alpha track detection. Alpha particles create streaks or tracks on sensitive film. The filtered aperture admits radon gas but prevents measurement of alpha radiation from sources other than radon. For example, to avoid humidity effects on registration of alpha particles to the detector's surface, a glass fibre filter can be placed in front of the plastic detector that also prevents alpha particles originating from radon decay products from reaching the detector's surface.

Bought by- Jonathan Tingley, Company - Geo-Environmental Services Ltd, on 13 March 2014 Latest version. Not to be distributed/networked. For multi-user access www.bsigroup.com/license © The British Standards Institution 2014

Track density on the film is directly proportional to the radon concentration within the design parameters of the monitor that is deployed in the field. When the film is "developed", the tracks are counted with an optical reader linked to a computer. The track density is then calculated and related to the radon activity which is reported as tracks per unit area per day or kBq/m^3.

A typical technique [70] is to place the plastic film inside a cylindrical tube of 44 mm inner diameter, 50 mm outer diameter and 300 mm in length. The detectors are on the top of the tube, held appropriately by a wire clip. The plastic tube with the plastic radon detector is set inside a larger plastic tube (1 000 mm in length and 70 mm inner diameter). The empty space between the two plastic tubes is filled with styrofoam material in granule pellet form to thermally isolate the volume of the radon tube (chamber). It is important that the SSNTDs are placed at a consistent depth.

Alpha particles from radon produced inside the volume of the inner tube (the chamber) irradiate the plastic detector and produce damage tracks. After exposure of about seven to nine days, the tracks are made visible either by chemical or electrochemical etching, usually in NaOH or KOH solution. Electrochemical etching is preferable because it produces large-diameter tracks and simplifies track counting. The track density is determined either by manual scanning and counting (jumping spark counter) or by an automated optical scanning system (video image analyser).

The alpha track method of radon measurement is relatively intensive. Therefore, under normal environmental field conditions, exposure periods in boreholes range from one to two weeks. For this reason, alpha track detectors are preferred in situations where confirmation of measurements made with short-term integrating devices is needed.

A factor that might affect the performance of these detectors is the variability in response of detectors from different production batches and from non-uniform plate-out effects of the radon decay products inside the tube (the container or chamber). Because of the variability of solid-state nuclear track-etch detectors, i.e. the plastics (thickness, acquired background and temperature during preparation), exceptional product quality control is required. Also, quality assurance measurements need to be in place, involving frequent calibrations for accuracy and duplicate exposures for precision estimates.

Passive detectors can also be used to measure radon flux from the soil using specially designed ion chambers. Depending on the volume of the unit, monitoring periods might typically range from 2 days to 40 days.

Oliver and Kharyat [71] have described a study of radon concentrations in ground gas using SSNTD in two parts of Derbyshire. They used the well-established "can-technique", which is a simple passive detection system using solid-state nuclear track detectors. Cylindrical cans, each containing a 20 mm by 20 mm piece of CR-39 plastic detector, were placed in the ground at a depth of 0.5 m and covered with a 0.7 m length of PVC tubing (closed at the top end) at each sampling location. The detectors were left in situ for approximately three weeks – long enough for the Rn222 to reach equilibrium with its long-lived parent, radium, and for a significant number of tracks resulting from its alpha-decay to be registered on the plastic. In each case, the detectors were etched electrochemically under standard conditions to enlarge the tracks for counting with an optical microscope.

Bought by- Jonathan Tingley, Company - Geo-Environmental Services Ltd, on 13 March 2014 Latest version. Not to be distributed/networked. For multi-user access www.bsigroup.com/license © The British Standards Institution 2014

B.6.4.3 Continuous radon monitors

A continuous method for measuring radon is one where sampling and analysis occur simultaneously, providing real-time measurement results. This can be a very useful and desirable situation, e.g., in the field, particularly along active fault zones, where radon concentrations might change significantly and rapidly. These devices are also used to monitor radon exposure chambers used in research and for other instrument calibration and standardization. Measurement intervals generally range from a minimum of 1 min to 15 min up to 48 h. The primary advantage of continuous radon monitors is that they provide real-time radon concentration data on a frequent basis. A number of commercially developed systems are available.

B.6.5 Construction of sampling installations

A number of different ways of obtaining gaseous samples of ground gas or for installing passive in-situ sampling devices are mentioned in **B.6.4**. The importance of sampling beneath the likely influence of atmospheric pumping caused by changes in atmospheric pressure and wind action that might induce gas exhalation is stressed. There seems general agreement that sampling should be carried out at depths of about 1.0 m or greater, although there are references to depths of 0.7 m and 0.8 m. If sampling is to be carried out from a particular depth, such as 1.0 metre below ground level, it is essential that the installation is designed so that the response zone is restricted to the required depth range and that the installation is properly sealed against ingress of air from shallower depths or the ground surface. The guidance provided in Clause **9** and Clause **10** on the construction of installations to measure permanent gases such as carbon dioxide and methane or VOCs is relevant to this task.

Annex C (informative) Anaerobic degradation and the formation of methane and carbon dioxide

C.1 General

The process known as anaerobic degradation is the decomposition of organic matter by bacteria in the absence of air, with the resultant formation of, principally, methane and carbon dioxide.

Natural sources of methane include (see also Annex D):

- natural gas – formed by anaerobic decomposition of prehistoric plant material, now trapped beneath the Earth's crust (this gas is usually associated with coal measures and oil deposits);
- marsh gas – formed by decomposition of plant material in the absence of air. The anaerobic process can occur where there are significant concentrations of organic material, for example, in alluvial deposits.

A major source of methane and carbon dioxide due to anaerobic decomposition is landfilled wastes. In landfills, there are a number of factors which influence gas formation. These include depth and age of the waste, types of waste contained within a site, moisture content, temperature, pH, and waste management practices.

C.2 Anaerobic degradation process within landfills

Biodegradable organic matter consists of an assortment of molecules whose chief constituent is carbon, associated with other elements such as hydrogen, nitrogen, sulfur and oxygen. Within landfilled wastes particularly, there are three important molecular types:

a) proteins (which contain nitrogen and sulfur);

Bought by- Jonathan Tingley, Company - Geo-Environmental Services Ltd, on 13 March 2014 Latest version. Not to be distributed/networked. For multi-user access www.bsigroup.com/license © The British Standards Institution 2014

b) fats; and

c) carbohydrates.

Initial biodegradation occurs by aerobic bacterial activity until there is insufficient oxygen in the waste to sustain this process further. There are then several stages of anaerobic decomposition before landfill gas, with major methane and carbon dioxide components, is produced.

The initial anaerobic phase consists of three stages.

1) The first stage involves the hydrolysis and fermentation of fats, proteins and carbohydrates by both facultative aerobic and anaerobic bacteria to produce simple organic acids, such as volatile fatty acids, as well as carbon dioxide, hydrogen and ammonia.

2) In the second stage, the volatile fatty acids are further degraded to acetic acid, carbon dioxide and hydrogen. This stage also enables the establishment of methanogenic bacterial populations.

3) The establishment of methanogenic bacterial populations results in a third stage of steady production, with the generation of a gas mixture, containing methane and carbon dioxide as its main components. The state of steady gas evolution can last for a considerable time before gas production starts to fall (see Figure C.1).

Figure C.1 **Decomposition of domestic waste**

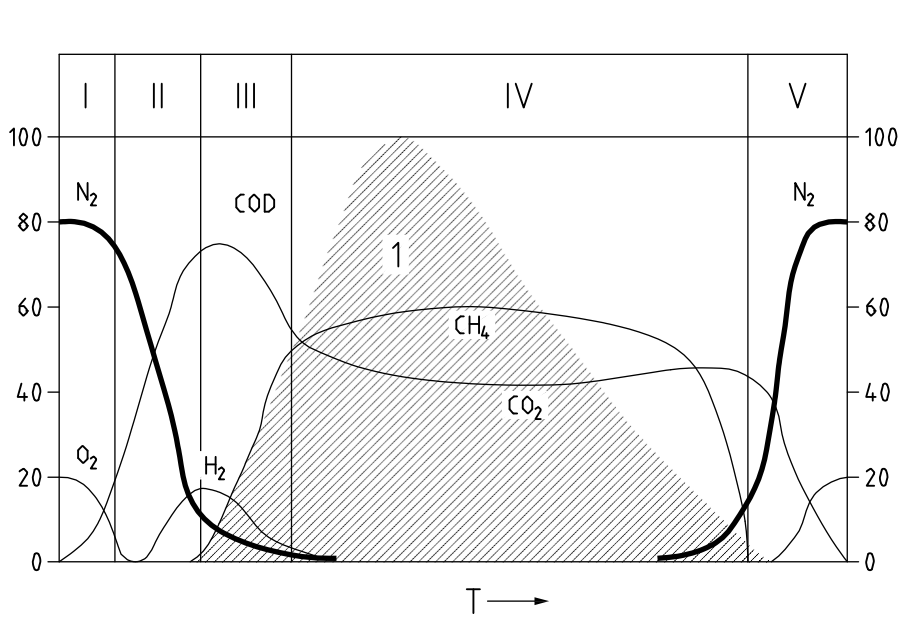

Key

1 Landfill-gas production

This figure has been based on Figure 3.6 in CIRIA Report 151 [72].

C.3 Changes in gas composition

The composition of gas associated with a landfill varies with both the time and the stage of the degradation process.

Initially, when waste is deposited, the gas composition is similar to that of ambient air (80% nitrogen, 20% oxygen and traces of carbon dioxide). The aerobic decomposition phase will result in the formation of carbon dioxide, with a reduction in the oxygen content and a lowering of the proportion of nitrogen.

Bought by- Jonathan Tingley, Company - Geo-Environmental Services Ltd, on 13 March 2014 Latest version. Not to be distributed/networked. For multi-user access www.bsigroup.com/license © The British Standards Institution 2014

The onset of anaerobic conditions, with the formation of volatile fatty acids, results in further production of carbon dioxide (up to 70%) and also the formation of hydrogen which can be as high as 10%. These gases contribute to the replacement of nitrogen.

The onset of the methanogenesis leads to the formation of methane and a reduction in the hydrogen and carbon dioxide concentrations. As the methanogenic stage stabilizes, the presence of hydrogen is eliminated by reaction with carbon dioxide to form more methane, and the production of methane and carbon dioxide stabilizes to give a steady gas composition (typically of the order of 60% methane and 40% carbon dioxide).

Once methane generation diminishes, atmospheric air affects the gas composition and other effects (such as solution in water and reaction with surrounding material) can result in very varied gas compositions.

Decomposition within a landfill can commence very quickly, dependant on how conducive the conditions are to the process, and steady state gas production can be maintained for 20 years to 30 years. Even when gas formation has started diminishing, alteration of the conditions of the landfill, e.g. compression or previously dry material becoming wet, can cause an increase in activity.

In alluvial materials, the content of methane can be quite significant, but the rate of gas production is likely to be low compared with an actively gassing landfill.

Annex D (informative) Sources, properties and hazards of selected gases

*COMMENTARY ON ANNEX **D***

The information about the properties and characteristics of individual gases is taken from a variety of primary and secondary sources. Regulatory limits and guidance values in this Annex are current at the time of publication (April 2013). It is advisable to check that they are still up-to-date before use. They have been derived from various sources including "Horizontal Guidance Note H1" [73] and The Environment Agency Chemical Standards Database (http://evidence.environment-agency.gov.uk/chemicalstandards/home.aspx).

D.1 Common sources of hazardous gases in the subsurface

D.1.1 Permanent gases

Methane and carbon dioxide can originate from land-filled wastes, biodegradable material present within the soil matrix of the made ground beneath a brownfield site, biodegradation of petroleum hydrocarbons, biodegradation of migrating landfill leachate, silt in docks and rivers, etc., coal deposits, peat, natural deposits (e.g. chalk and alluvial deposits), leaks of mains gas (natural gas) and sewer gas. Wherever biodegradable materials are present, microbial activity produces methane and/or carbon dioxide depending on whether conditions are aerobic or anaerobic. A number of additional trace gases might also be produced. Information on techniques for identifying the origin of gas can be found in **D.7**.

Landfill gas consists primarily of methane and carbon dioxide at a ratio of approximately 60:40 (but see Annex C). Depending on microbial activity, this ratio can change. The ratio might also be affected by the different rates of solution of carbon dioxide and methane into groundwater and by further microbial action on methane as the gases migrate through the ground.

A number of additional trace gases can also be present, including:

- alcohols ($C_{nH2n+1}OH$);
- alkanes (C_nH_{2n+2}), cycloalkanes (C_nH_{2n}) and alkenes (C_nH_{2n});

Bought by- Jonathan Tingley, Company - Geo-Environmental Services Ltd, on 13 March 2014 Latest version. Not to be distributed/networked. For multi-user access www.bsigroup.com/license © The British Standards Institution 2014

- aromatic hydrocarbons (monocyclic or polycyclic);
- esters (e.g. methyl formate, H-COO-CH_3) and ethers (e.g. ethoxyethane, CH_3-CH_2-O-CH_2-CH_3);
- halogenated compounds; and
- organosulfur compounds such as mercaptans (also called "thiols", where the compound contains the functional group -SH).

The density of landfill gas depends upon the ratio of carbon dioxide to methane: the higher the ratio of carbon dioxide, the greater the density.

D.1.2 VOCs

VOCs are organic compounds, typically defined as those that are volatile under normal environmental/atmospheric conditions, although they can be found in the ground in the solid, liquid and the dissolved phase as well as in the gaseous phase. The sources of VOCs in ground gas include industry (leaks and spills), domestic dwellings (e.g. leaks from domestic heating oil tanks), landfill sites and natural sources (e.g. carbon disulfide in coastal and marshland area with high biological activity). Many VOCs readily undergo microbial degradation in the environment, resulting in the generation of additional VOCs (e.g. reductive dechlorination of tetrachloroethene to form trichloroethene).

D.2 Physical and chemical hazards

D.2.1 Methane

Methane (CH_4) is a colourless, odourless, flammable gas.

Methane is explosive at concentrations of between about 5% and 15% v/v (volume fraction) in air. Below 5% v/v (the lower explosive limit – LEL) there is insufficient methane to support combustion and above 15% v/v (the upper explosive limit – UEL) there is insufficient oxygen to support combustion.

The flammability range of methane varies depending on the concentrations of other gases present. For example:

- where carbon dioxide concentrations are >25% v/v, methane is non-flammable; and
- if the oxygen concentration is reduced, the limits of flammability are reduced (e.g. at 13.45% v/v oxygen, the LEL and UEL are altered to 6.5% v/v and 7% v/v respectively, whilst at 13.25% oxygen, the mixture is incapable of propagating flame (see [14]).

Methane is a low toxicity gas but can result in asphyxiation due to its ability to displace air and hence oxygen. Oxygen starvation occurs at 33% v/v methane, whilst at 75% v/v methane, death results after 10 minutes.

Methane is less dense than air.

D.2.2 Carbon dioxide

Carbon dioxide (CO_2) is a colourless, odourless gas. It is both highly toxic and an asphyxiant and can cause adverse health effects in concentrations greater than 0.5% v/v. It is denser than air.

- 3% v/v carbon dioxide can result in headaches and shortness of breath, with increasing severity up to 5% v/v or 6% v/v;
- 6% to 10–11% v/v causes visual distortion, headaches, increased heart rates, dizziness, mental depression, tremors and rapid loss of consciousness (less than 15 minutes) possibly resulting in death;
- >22% v/v is likely to result in death.

Bought by- Jonathan Tingley, Company - Geo-Environmental Services Ltd, on 13 March 2014 Latest version. Not to be distributed/networked. For multi-user access www.bsigroup.com/license © The British Standards Institution 2014

The Health and Safety Executive [74] has published the following limiting concentrations for work-related exposure:

- long-term exposure limit (LTEL – 8 hour period): 0.5% v/v; and
- short-term exposure limit (STEL – 15 minute period): 1.5% v/v.

An additional hazard arises if air containing more than 0.5% carbon dioxide provides the combustion air to a central heating boiler or similar apparatus (e.g. it is drawn in from the sub-floor void). In these circumstances, there is a danger that carbon monoxide could be formed.

D.2.3 Carbon monoxide

Carbon monoxide (CO) is a colourless and odourless gas that is toxic, flammable and explosive. It is denser than air. Symptoms of mild exposure include headaches and flu like effects.

The acute effects produced by carbon monoxide in relation to ambient concentration in parts per million (ppm) are listed in Table D.1 (see [75] and [76]).

Table D.1 **Effects of carbon monoxide**

Concentration	Symptoms
35 ppm (0.0035%)	Headache and dizziness within six to eight hours of constant exposure
100 ppm (0.01%)	Slight headache in two to three hours
200 ppm (0.02%)	Slight headache within two to three hours; loss of judgment
400 ppm (0.04%)	Frontal headache within one to two hours
800 ppm (0.08%)	Dizziness, nausea, and convulsions within 45 min; insensible within two hours
1 600 ppm (0.16%)	Headache, tachycardia, dizziness, and nausea within 20 min; death in less than two hours
3 200 ppm (0.32%)	Headache, dizziness and nausea in five to ten minutes; death within 30 min
6 400 ppm (0.64%)	Headache and dizziness in one to two minutes; convulsions, respiratory arrest, and death in less than 20 min
12 800 ppm (1.28%)	Unconsciousness after two to three breaths; death in less than three minutes

- The LEL in air is 12.5%.
- The UEL in air is 74.2%.

The Health and Safety Executive [74] has published the following limiting concentrations for work-related exposure:

- long-term exposure limit (LTEL – 8 hour period): 30 ppm; and
- short-term exposure limit (STEL – 15 minute period): 200 ppm.

The UK National Air Quality Objective is 10 mg/m^3 (8.6 ppm) maximum daily running 8 h mean [73].

D.2.4 Hydrogen sulfide

Hydrogen sulfide (H_2S) is a colourless gas with a distinctive odour of rotten eggs at low concentrations (<1 ppm) but odourless at higher concentrations (>50 ppm) due to anaesthesia of the olfactory sense. It is flammable, explosive and toxic.

According to *Air Quality Guidelines for Europe* [77]:

- 15 mg/m^3 – 30 mg/m^3 (10 ppm – 20 ppm) is the threshold for eye irritation;
- 70 mg/m^3 – 140 mg/m^3 (50 ppm – 100 ppm) can result in serious eye damage;

Bought by- Jonathan Tingley, Company - Geo-Environmental Services Ltd, on 13 March 2014 Latest version. Not to be distributed/networked. For multi-user access www.bsigroup.com/license © The British Standards Institution 2014

- 210 mg/m^3 – 350 mg/m^3 (150 ppm – 250 ppm) results in loss of olfactory sense;
- 450 mg/m^3 – 750 mg/m^3 (320 ppm – 530 ppm) results in pulmonary oedema with risk of death;
- 750 mg/m^3 – 1 400 mg/m^3 (530 ppm – 1 000 ppm) results in strong central nervous system stimulation, hypernoea followed by respiratory arrest;
- 1 400 mg/m^3 – 2 800 mg/m^3 (1 000 ppm – 2 000 ppm) results in immediate collapse with paralysis of respiration.

The LEL in air is 4.5%.

The UEL in air is 45.5%.

The Health and Safety Executive has published [74] the following limiting concentrations for work-related exposure:

- long-term exposure limit (LTEL – 8 hour period): 5 ppm (7 mg/m^3); and
- short-term exposure limit (STEL – 15 minute period): 10 ppm (14 mg/m^3).

Environmental Assessment levels for air are (see [73]):

- 150 μg/m^3 short term (averaging time = 24 h);
- 140 μg/m^3 long term.

The malodorous property of hydrogen sulfide is a source of annoyance for a large proportion of the general population at concentrations below 1.5 mg/m^3. In order to avoid complaints about odour annoyance among the exposed population, hydrogen sulfide concentrations ought not to exceed 7 μg/m^3, with a 30-minute averaging period [77].

D.2.5 Hazards associated with VOCs

VOCs have a wide range of physico-chemical and toxicological properties. The most common hazard is inhalation exposure, where even parts per billion concentrations of some VOCs can present a potential risk to human health. The human health effects of different VOCs depend on the toxicity of the VOC, the degree, nature, and duration of exposure, as well as the sensitivity and well-being of the receptor. Exposure can be acute or short-term in nature (up to 14 days), intermediate (up to 1 year) or chronic (greater than 1 year). Odour nuisance and flammable/explosive hazards might also be present for VOCs.

Sources of data on the properties of VOCs and relevant regulatory limits and guidance values include [73] and http://evidence.environment-agency.gov.uk/ChemicalStandards/home.aspx.

D.2.6 Phytotoxic effects

Ground gas is usually saturated with moisture and is corrosive. It can cause vegetation to die due to the elimination of oxygen from the plant's root zone or to the presence of phytotoxic compounds.

D.3 Factors influencing the generation of permanent gases and VOCs in the subsurface

Gas pressure within the sub-surface is dependent on the gas generation rate, the permeability of the ground and the surrounding strata, and changes in the level of leachate or groundwater within the site. Other important factors are temperature and atmospheric pressure.

Factors that influence the generation of permanent gases include the volume and nature of degradable material, moisture content and ground temperature.

Bought by- Jonathan Tingley, Company - Geo-Environmental Services Ltd, on 13 March 2014 Latest version. Not to be distributed/networked. For multi-user access www.bsigroup.com/license © The British Standards Institution 2014

Factors influencing the presence of VOCs in ground gas include the physical/chemical properties of the VOCs, the geologic conditions, the timescale since the source event occurred, chemical/biological conditions and, where the source is sufficiently shallow, air pressure gradients.

D.4 Factors influencing the migration and behaviour of permanent gases and VOCs in ground gas

D.4.1 Permanent gases

It is important during the monitoring of a site that atmospheric conditions are recorded for three to four days before and during the sampling. Local climatic conditions at the time of monitoring also need to be recorded. This information can help in the interpretation of the data. The most important parameters to record are:

- atmospheric pressure; and
- rainfall.

Other useful parameters are:

- temperature (ambient air and ground gas);
- wind speed/direction;
- depth to groundwater;
- condition of ground surface (dry, wet, saturated, etc.);
- nearby excavations, etc.

During dry periods the ground can crack, especially if clay is used to cover sites. This leads to an increase in gas emissions at the surface. In periods of wet weather, the clay becomes wet and swells, and cracks are sealed. This reduces surface gas emissions and can lead to increased gas concentrations and increased lateral migration. A measurement of soil permeability and moisture content can be helpful in assessing these effects.

A rising water table, caused by rainfall for example, can put the gas under pressure and force it to the surface; however, it can also block migration pathways. The saturation of superficial soils can restrict the venting of landfill gas to atmosphere. This can result in variations in gas pressure and concentrations.

Falling atmospheric pressure can increase emission rates. Rising atmospheric pressure can have the opposite effect. The magnitude of this effect depends upon the soil permeability and the rate at which the pressure changes.

In general, however, it can be difficult to establish the cause of changes in concentrations and emissions since they might be due to a combination of the above factors.

When sampling ground gas close to the surface, the effect of ambient air penetration needs to be considered. The sampling depth is determined by the presence of impermeable cover over the ground surface, the soil type (porosity, clay content, etc.) and the depth of bedrock. It is considered unlikely that useful samples can be collected at depth less than 0.5 m. For routine monitoring of ground gas, a minimum depth of 1 m is recommended.

Circumstances in cold conditions make soil-gas sampling difficult in many ways. Ground frost greatly limits the mobility of gas in soil and needs to be considered in planning and carrying out sampling as well as in interpreting the measurement results. Similarly, water saturated ground can limit mobility.

Bought by- Jonathan Tingley, Company - Geo-Environmental Services Ltd, on 13 March 2014 Latest version. Not to be distributed/networked. For multi-user access www.bsigroup.com/license © The British Standards Institution 2014

The main problem with soil-gas sampling below frozen ground is the loss of air-filled porosity due to the high moisture content in the zone between frozen and unfrozen parts of the ground. Consequently, the samples need to be taken from greater depths.

Depending upon site engineering and local geology, gas can migrate considerable distances and can present a hazard to nearby developments. In the case of mine gas, the cessation of water pumping can lead to a rise in water table levels which can increase the gas pressure, and consequently increase surface gas emissions. It is therefore important to gain an understanding of gas concentrations and flow rates to establish the potential for gas migration off-site or atmospheric emissions.

Gas can migrate very long distances when it enters a permeable layer that is confined by an overlying impermeable layer or perched groundwater. Conversely, gas migration occurs far less in a shallow unconfined stratum and might be limited to only tens of metres.

D.4.2 VOCs in ground gas

The general principles governing the migration of VOCs in the ground are similar to permanent gases, although the controlling factors can differ.

The migration of VOCs in ground gas can be via three primary mechanisms:

- diffusive flow (movement of constituent along a concentration gradient);
- advective flow (movement of constituent due to motion of a transporting fluid);
- dispersion (transport resulting from local variations in fluid flow, e.g. due to friction effects in the matrix).

Modelling tools used to simulate the transport of VOCs in the unsaturated zone typically rely on modelling diffusive driven flow. Factors which influence the migration of VOCs in the unsaturated zone include the chemical/physical properties of the VOCs, the geologic conditions (e.g. ground permeability) and chemical/biological conditions (e.g. whether microbial degradation is active).

Advective flow can also play an important role, in particular where the ground surface is uncovered. As for permanent gases, atmospheric pressure changes might affect the migration of VOCs in ground gas, either for a shallow source beneath an uncovered site or where the ground gas regime is sensitive to such changes (e.g. preferential pathways present in the subsurface). Other factors which might impact upon the emission to site surface or change the condition of the unsaturated zone include rainfall (in particular for open ground, due to change to ground saturation), temperature and wind effects (where the source is sufficiently shallow and the ground sensitive to such effects) and anthropogenic influences (e.g. preferential migration routes along utility corridors). Cyclical changes, such as tidal affects, can trigger advective flow in the unsaturated zone.

The migration of VOCs in ground gas is also affected by the presence of other gases. Where migration of permanent gases is occurring, VOCs can also be carried and transported through the unsaturated zone.

D.5 Ingress into buildings

Toxic, asphyxiating and explosive gases can enter buildings and other structures and thus variously pose potential risks to occupants and users, and to the structures themselves. Lower pressures and differences in concentration in buildings can cause gases to penetrate the buildings. Causes of differential pressure effects include the rise of warm air within buildings and the operation of air-conditioning systems. Gas can enter through:

Bought by- Jonathan Tingley, Company - Geo-Environmental Services Ltd, on 13 March 2014 Latest version. Not to be distributed/networked. For multi-user access www.bsigroup.com/license © The British Standards Institution 2014

- cracks and openings in concrete ground slabs such as cracks due to shrinkage;
- construction joints/openings, e.g. at wall/foundation interface with ground slab;
- cracks in walls below ground level present due for example to shrinkage or movement;
- gaps and openings in suspended concrete or timber floors;
- gaps around service pipes and ducts; and
- cavity walls.

Some building construction is more sensitive than others to gas ingress. Block and beam flooring used widely in the UK has a large number of gaps between the elements that allows gas to pass through and has minimal gas resistance. A well-engineered reinforced concrete cast in-situ floor slab has much more resistance to ground gas ingress, with the main ingress points being at joints and service entry points. In many floor slabs, the joints are well sealed, which also provides protection against gas ingress.

D.6 Ingress into other structures

Gas migration into other structures also needs to be considered, especially below ground structures such as manholes, culverts, lift pits, shafts, etc.

NOTE 1 Structures do not need to be buried for gas ingress to occur.

NOTE 2 A number of deaths have occurred where landfill gas has entered culverts, etc. under or through landfills.

D.7 Identifying the source of permanent gases

Identifying the origin of the gas is important when making decisions regarding its monitoring and control. It is of particular importance for permanent gases which are prevalent in the environment. It is, however, very difficult to do and reliance on one line of evidence is not advisable. The composition of a gas might help identify the source. For example:

- gas from a geological source might have a higher proportion of methane than landfill gas;
- geologically-derived gas generally contains up to 15% ethane and higher hydrocarbons, while biogenic methane contains only trace amounts;
- it might be possible to distinguish mains gas from other gases if the exact composition of the local mains gas is known;
- landfill gas might contain VOCs such as benzene, toluene, ethylbenzene, and xylenes (BTEX) and chlorinated solvents.

Mains gas might have odour compounds such as sulfides and mercaptans added to give the gas a distinctive odour; it might also contain long chain hydrocarbons such as octane and nonane. Helium is often removed from mains gas.

Landfill gas might also contain greater than normal concentrations of higher hydrocarbons if the waste contains substances that generate or release such gases and vapours.

Identification of different components might, however, be limited as the components can be affected by chemical changes occurring in the ground during migration, by solution in groundwater and by adsorption onto clays, oxidation, etc. Different compounds might diffuse through the ground at different rates so the composition of gas at distance from a source might change.

Bought by- Jonathan Tingley, Company - Geo-Environmental Services Ltd, on 13 March 2014 Latest version. Not to be distributed/networked. For multi-user access www.bsigroup.com/license © The British Standards Institution 2014

Gas from a geological source might have a higher proportion of methane than landfill gas. However, migrated landfill gas regularly contains higher concentrations of methane than found in the source landfill. This can lead to a misconception that the gas is from a geological source. The reason for this is the physical scrubbing of carbon dioxide that results in the enrichment of methane.

Biogenic (formed by microbiological activity) methane and thermogenic (formed by thermal degradation of organic matter at higher temperatures and pressures) methane have different proportions of carbon isotopes carbon 12 and carbon 13, which can be measured to identify the origin of the gas (see [14]). The technique, however, requires specialist laboratories. Oxidation of landfill gas might change the isotopic signature of the gas.

Annex E (informative)

Sampling protocols – Permanent gases

Table E.1 to Table E.5 show examples of sampling protocols for permanent gases.

NOTE 1 All completed protocol forms are to include the name of the person who completed it and when it was completed.

Table E.1 **Pre-site checks**

Action	Complete	Comments/faults found
Equipment check – power supply, pumps, displays, filter		
Servicing up-to-date		
Calibration check (note any drift) (see Table E.2)		
Instrument type		
Instrument serial number		

Table E.2 **Calibration chart**

	Concentration (volume fraction)	
	Zero	Span
Methane		
Carbon dioxide		
Oxygen		
Instrument type		
Instrument serial number		

NOTE 2 Calibration needs to be carried out at the beginning and end of every day of monitoring wherever possible. Any calibration drift is to be noted and then corrected for.

Table E.3 **Meteorological conditions**

	Entering site	Leaving site
Atmospheric pressure (Pascals) (falling or rising		
Weather conditions (dry, rain)		
Air temperature (°C)		
Wind speed and direction		
Site conditions (e.g. surface conditions around sampling locations frozen, covered with snow, water logged, concrete)		
On-site activities (e.g. construction or other works in progress)		
Off-site activities (e.g. construction or other works in progress)		

Bought by- Jonathan Tingley, Company - Geo-Environmental Services Ltd, on 13 March 2014 Latest version. Not to be distributed/networked. For multi-user access www.bsigroup.com/license © The British Standards Institution 2014

Table E.4 **Actions at each sampling point**

Date	
Time	
Sample point number	
Location	
Monitoring equipment	
Instrument serial number	
Exchange of dead volume, times	
Suction to steady state condition	

NOTE 3 Measurements from boreholes are to be carried out in the following order: pressure difference, flow rate, gas concentration and water table depth.

Table E.5 **Monitoring results during sampling**

	Borehole concentration (volume fraction)		Technique used
	Peak	Steady	
Methane			
Carbon dioxide			
Oxygen			
Other gases			
Flow rate (L/min)			
Water table depth (m)			
Soil-gas temperature (°C)			
Pressure difference			

Annex F (informative) Assessment of whether sufficient gas monitoring data have been collected

F1 Introduction

This Annex provides an example of the guidance in **8.7**.

It is stressed that the sample presented is for a simple case only. The suggested methodology is to be used with care. Failure to do so might lead to buildings being under-protected. It is important to recognize that conditions can change, for example, a change in groundwater levels, sealing of the surface due to water logging or freezing, or construction activities. The assessor needs to be well experienced in ground gas risk assessment. Decisions and the processes used to arrive at them need to be recorded.

F2 Data sufficiency

At any point in time during the monitoring, the sufficiency of the data can be assessed by adopting the procedure detailed in Table F.1.

Bought by- Jonathan Tingley, Company - Geo-Environmental Services Ltd, on 13 March 2014 Latest version. Not to be distributed/networked. For multi-user access www.bsigroup.com/license © The British Standards Institution 2014

Table F.1 **Assessing sufficiency of data**

Action	Result
From current results (concentration, flow rates and pressure), estimate likely risk associated with ground gas (note steady state flow results are to be used, not peak values that only last a few seconds on opening the gas tap) (**9.3.3**).	Current estimate of risk
What increase in gas concentration is required to increase the estimated risk and the form of gas protection to be provided?	Estimated increase in gas concentration
What increase in flow rate is required to increase the estimated risk and the form of gas protection to be provided?	Estimated increase in flow rate
Is the increase in gas concentration feasible given the known source of gas, the collected gas monitoring data and the conceptual site model?	Yes/No
Is the increase in flow rate feasible when compared to gas generation and migration model results, the collected gas monitoring data and the conceptual site model?	Yes/No
Decide whether further monitoring is required.	Yes/No

F3 Example

The desk study for a site has shown that the site is located on part of a car park immediately next to buildings that were constructed in the 1950s. The desk study has not identified any landfill sites or mine workings nearby or below the site. The only minor sources of ground gas are a thin layer of made ground that is around 1 m thick and a layer of alluvium between 1.2 m and 3.1 m thick.

The made ground is black ash and fine grained sand with crushed concrete. The alluvium is a soft brown sandy clay with peat layers up to 0.5 m thick. The peat is classified as H10, (Von Post classification, see [78]), which indicates it is strongly decomposed. The peat also contains large pieces of wood. Groundwater is at 0.6 m. Chemical testing of the made ground indicates it has a total organic carbon content (TOC content) of between 1.5% and 3.5%. The pH is >9.

Periodic gas monitoring has been carried out over a very short duration. Gas monitoring has been carried out on three occasions over three weeks with one set of data at both low and falling atmospheric pressure (990 mb and fell 25 mb over previous four days). The data is summarized in Table F.2.

Table F.2 **Summary of data**

Well response zone	Results
Made ground	0% to 3% methane 0% to 3.5% carbon dioxide 21% to 17% oxygen Flow rates 0 L/h to 0.6 L/h
Alluvium	60% to 80% methane in all three wells Carbon dioxide 0% to 12% Oxygen 0% Flow rates 0 L/h to 0.3 L/h (peak values on opening ignored as they are due to changes in water level when tap is closed and are caused artificially).

Bought by- Jonathan Tingley, Company - Geo-Environmental Services Ltd, on 13 March 2014 Latest version. Not to be distributed/networked. For multi-user access www.bsigroup.com/license © The British Standards Institution 2014

The risk has been estimated by using Gas Screening Values (GSV) as defined in CIRIA C665 [4]. The GSV have been estimated using the data for the wells with response zones in the alluvium as this is the most significant source of gas and gives a reasonable worst case estimate. The site is to be developed as an office building and therefore Situation A has been used in CIRIA C665 [4]. See Table F.3 for the final assessment of the sufficiency of the data.

Table F.3 **Assessing sufficiency of data**

Action	Result
From current results (concentration, flow rates and pressure), estimate likely risk associated with ground gas (note steady state flow results are to be used, not peak values that only last a few seconds on opening the gas tap).	Current estimate of risk: GSV = gas concentration × borehole flow rate GSV = 0.8 × 0.3 = 0.24 L/h Characteristic situation = CS 2 (maximum limit is 0.7 L/h)
What increase in gas concentration is required to increase the estimated risk and the level of gas protection to be provided?	Estimated increase in gas concentration: Keeping the flow rate constant, the gas concentration would need to exceed 100% to move into next risk band. This is not feasible.
What increase in flow rate is required to increase the estimated risk and the level of gas protection to be provided?	Estimated increase in flow rate: Keeping the concentration constant, the flow rate would need to exceed 0.8 L/h to move into next risk band, i.e. it needs to increase 2.67 times. From the current data and knowledge of the gas source and generation potential, this is not considered feasible.
Is the increase in gas concentration feasible given the known source of gas?	No It is not possible for the methane concentration to exceed 100%.
Is the increase in flow rate feasible when compared to gas generation and migration model results, the collected gas monitoring data and the conceptual site model?	No Future gas generation in the peat is likely to be negligible but there is a reservoir of trapped gas. Groundwater variations are likely to be the main variable affecting flow rate. Modelling of groundwater variations and piston effect of rises in groundwater pushing gas out of ground shows flow rate unlikely to exceed 0.8 L/h and then not by a great amount. Modelling of gas emissions due to variation in atmospheric pressure using permeability of soils also shows flow rate unlikely to exceed 0.8 L/h.
Decide whether further monitoring is required.	Based on the above analysis, further gas monitoring is not required.

Bought by- Jonathan Tingley, Company - Geo-Environmental Services Ltd, on 13 March 2014 Latest version. Not to be distributed/networked. For multi-user access www.bsigroup.com/license © The British Standards Institution 2014

Annex G (informative) Portable equipment for measurement of concentrations of permanent gases

Table G.1 **Portable equipment to measure permanent gases**

Technique	Gases measured	Comments
Catalytic oxidation	Methane and other flammable gases	Detects the presence of flammable gas from the heat generated by the oxidation of the combustible material within the gas sample on a small heated sensing element. Catalytic oxidation instruments are reasonably sensitive and are capable of detecting concentrations of flammable gases at 0.05% to 5% (volume fraction) methane of the gas in question. Care needs to be taken to ensure that the instrument is calibrated for the particular gas being analysed. The main disadvantages of the instrument are as follows. The instrument reads any flammable gas and therefore if flammable gases other than methane are present, the reading might be erroneous. An oxygen concentration of >2% (volume fraction) is required to ensure complete oxidation of methane; otherwise, a depressed reading might be given. It is therefore important to take an oxygen reading before using this instrument in order to establish whether the instrument will give correct readings. Some instruments have an electrochemical oxygen sensor incorporated into them. The sample is destroyed as part of the measurement process, thus the instrument cannot be used to recirculate gas. At concentrations in excess of the range of the instrument, it might read zero. This is potentially dangerous and, as such, instruments tend to have incorporated within them a thermal conductivity sensor which gives an output at concentrations in excess of its normal range. The sensor is likely to deteriorate with age and might be poisoned by other minor constituents of landfill gas. Calibration therefore needs to be carried out regularly, as it is not possible to tell by any other means when the sensor fails.
Thermal conductivity/ catalytic oxidation	Methane and other flammable gases plus carbon dioxide	Usually part of catalytic oxidation instruments in order to expand the measurement range. This gives a reading of total flammable gases as well as carbon dioxide. It compares the thermal conductivity of the sample against an internal electronic standard representing atmospheric air. It can read in the range of 0% to 100% (volume fraction), but the sensitivity below the LEL of the flammable gas is much reduced. The initial measurement of methane is always made on the least sensitive range (0% to 100% volume fraction), followed by measurement on the most sensitive range (0% to 100% LEL). The instrument needs to be calibrated using both methane and carbon dioxide in order to ensure accurate readings of both gases. The instrument can operate in oxygen-depleted atmospheres. A variation of the thermal conductivity device is the binary gas analyser. This takes a measurement of the landfill gas, and then a second reading of the same gas is passed through a carbon dioxide filter. This is likely to give an accurate reading of methane, from which the carbon dioxide concentrations can be calculated.

Bought by- Jonathan Tingley, Company - Geo-Environmental Services Ltd, on 13 March 2014 Latest version. Not to be distributed/networked. For multi-user access www.bsigroup.com/license © The British Standards Institution 2014

Table G.1 **Portable equipment to measure permanent gases**

Technique	Gases measured	Comments
Infra-red	Aliphatic hydro-carbons, carbon dioxide, carbon monoxide	Infra-red analysers can be used to measure the different components of landfill gas. Each analyser consists of an infra-red source and a detector. Specific analysers are available for methane and carbon dioxide, and can measure in the range of 5 × 10-6 up to 100% (volume fraction). Carbon monoxide can also be measured with this technique. One disadvantage is that the instruments indicate "methane" for "other gases". The analysers are relatively pressure sensitive and do not give accurate readings where a pressure differential exists between the reference and the sample-measuring cell. Moisture or dirt on the cell might affect the reading and thus filters are often incorporated into the instrument. The device does not, as part of the measurement, consume the sample and this allows for the gas to be recirculated. It does not require oxygen and therefore works in an oxygen-deficient atmosphere. Many of the more recent instruments do, however, incorporate an oxygen sensor which allows for a better understanding of the site.
Flame ionization	Methane and other flammable gases	Can be used to identify any flammable gas, usually in the range 1 × 10-6 to 10 000 × 10-6. The instruments employ a hydrogen/air flame and are generally not intrinsically safe; the instrument is therefore not to be used where flammable gas concentrations exceed around 1% (volume fraction). Intrinsically safe instruments are now available. The instruments do not operate in oxygen-deficient atmospheres (but usually have their own oxygen supply), and their accuracy might be affected by the presence of gases other than methane, such as hydrogen, carbon dioxide and water vapour. The measurements given are therefore to be treated with caution in such environments and the absence of gas does not indicate a safe environment. These instruments are very useful for pinpointing sources of surface emissions both on-site and within buildings where high sensitivities are required. The sensing method destroys the sample and therefore the instrument cannot be used for recirculation purposes.
Gas chromatography (GC)	Methane, carbon dioxide, nitrogen, oxygen, hydrogen	Regarded as the most reliable technique for analysing the major components of landfill gas. The instrument is not portable, but might be cost-effective in a field laboratory if a large number of samples are to be analysed on a regular basis. The technique is recommended to help confirm portable measurements. This is the only method for measuring nitrogen in a sample. Thermal conductivity detectors (which are frequently used by field gas chromatographs) are of limited application in monitoring for ground gases, as a result of the relative insensitivity of the detector to substances present in trace quantities. GC can be combined with mass spectrometry (GC-MS) to analyse for trace components, although such instruments are more commonly employed at the laboratory level.

Bought by- Jonathan Tingley, Company - Geo-Environmental Services Ltd, on 13 March 2014 Latest version. Not to be distributed/networked. For multi-user access www.bsigroup.com/license © The British Standards Institution 2014

Table G.1 **Portable equipment to measure permanent gases**

Technique	Gases measured	Comments
Direct-reading detecting tubes	Some gases at high level	Provides a very simple but crude indication of the components of landfill gas. A small hand-held pump is used to draw a gas sample through the tube containing a reagent. This then reacts to produce a colour change corresponding to the concentration of the gas. Different tubes are required for different gases. The tubes cannot be used to obtain accurate values but do help as a general indicator of the presence of specific gases.
Electro-chemical cells	Oxygen	These can measure in the range 0% to 25% or 0% to 100% by volume. They are simple to use; however, the moisture content within landfill gas, as well as its corrosive nature, can lead to a reduction in sensitivity within the instrument. The electrochemical cell has a limited shelf life and the instrument needs, therefore, to be calibrated regularly when in use. Electrochemical cells need to be used to ensure safe conditions prior to the use of flame ionization detectors or prior to entry into confined spaces.
Para-magnetic cell	Oxygen	Relies on the unique property of oxygen that it has a positive magnetic susceptibility, whereas all other common gases have a negative magnetic susceptibility. Three types of instrument exist: 1) thermomagnetic (magnetic wind): 2) Quincke analysers; and 3) magnetodynamic (dumbbell). The major drawback is that they actually respond to changes in partial pressure of oxygen, and thus the reading fluctuates in response to changes in atmospheric pressure. This reduces the accuracy of this technique.

Annex H (informative) Apparatus for measurement of gas-flow rate

Table H.1 **Apparatus for measuring gas flow rate**

Instrument	Description	Advantages	Disadvantages
Mass flow meter	A small portable device, capable of measuring the total flow rate of gas from a borehole. Can measure flow rates down to around 2 mL/min.	Simple to use. Accurate. Can be logged and downloaded to a computer.	High head loss, as flow is constrained to pass through narrow sample tube. Need to know concentrations of individual gases to obtain their separate flow rates.
Laminar flow elements	Measure total flow rate of gas down to around 0.2 mL/min, depending upon the model used.	Simple to use. Reasonable accuracy.	As mass flow meter but reading needs to be corrected for viscosity.

Bought by- Jonathan Tingley, Company - Geo-Environmental Services Ltd, on 13 March 2014 Latest version. Not to be distributed/networked. For multi-user access www.bsigroup.com/license © The British Standards Institution 2014

Table H.1 **Apparatus for measuring gas flow rate**

Instrument	Description	Advantages	Disadvantages
Rotameter	Consists of a float which is free to move in a graduated glass tube. As the gas flow enters at the bottom of the device, the float is pushed up and can be read off against a scale. Measures the total flow rate down to 100 mL/min depending on model.	Simple to use.	As mass flow meter but limited range; limited accuracy. Reading needs to be corrected for density.
Soap-bubble flow meter	Similar in principle to the rotameter, however, the float is made up of a soap bubble and therefore presents a minimal resistance to the flow and is therefore better at low flow rates. Can measure flow rates down to around 0.01 mL/min.	Wide range of flow rates.	As mass flow meter but: on-site measurements can be difficult to obtain; more than one instrument might be necessary where a wide range of flows is encountered.
Dynamic and static flux box tests	An indirect technique for measuring flow rates down to less than 1 mL/min. The box is placed over a standpipe. Gas is free to move into the box and the rate at which concentrations build up within the box is measured using suitable portable equipment. The flow rate is calculated from a mass balance model.	Wide range of flow rates. Can distinguish between different gases. Can also be used to take emission rate measurements directly from the soil surface.	Test can take a long time to perform. High flow rates might be difficult to assess.
Hot wire anemometer	Based on a heated wire probe which is cooled in a moving stream of gas. The resistance of the wire changes with cooling and this produces a signal which is proportional to the velocity of the moving gas. It can measure velocities down to around 0.01 m/s.	Simple to use.	Difficult to introduce probe into gas stream. Affected by wind. Limited range. Only measures total flow.

NOTE Similar flow meters can be used to calibrate pumps used for the sampling of VOCs in ground gas using sorbent tubes.

Annex I (informative) Installation and sampling train leakage tests

I.1 General

It is of particular importance to have confidence that the installation point and sampling train are leak-free prior to collection of ground gas samples for VOCs analysis. If leakage occurs, atmospheric air becomes entrained, diluting the sample and leading to potentially erroneous results. There are a number of tests that can be undertaken to investigate whether leakage is occurring within the sampling system. Figure I.1 illustrates the most common locations where leakage can occur. Some of the tests described can be applied to monitoring wells installed to allow permanent gas monitoring and sampling.

Bought by- Jonathan Tingley, Company - Geo-Environmental Services Ltd, on 13 March 2014 Latest version. Not to be distributed/networked. For multi-user access www.bsigroup.com/license © The British Standards Institution 2014

Figure I.1 **Potential sources of leakage when collecting ground gas samples**

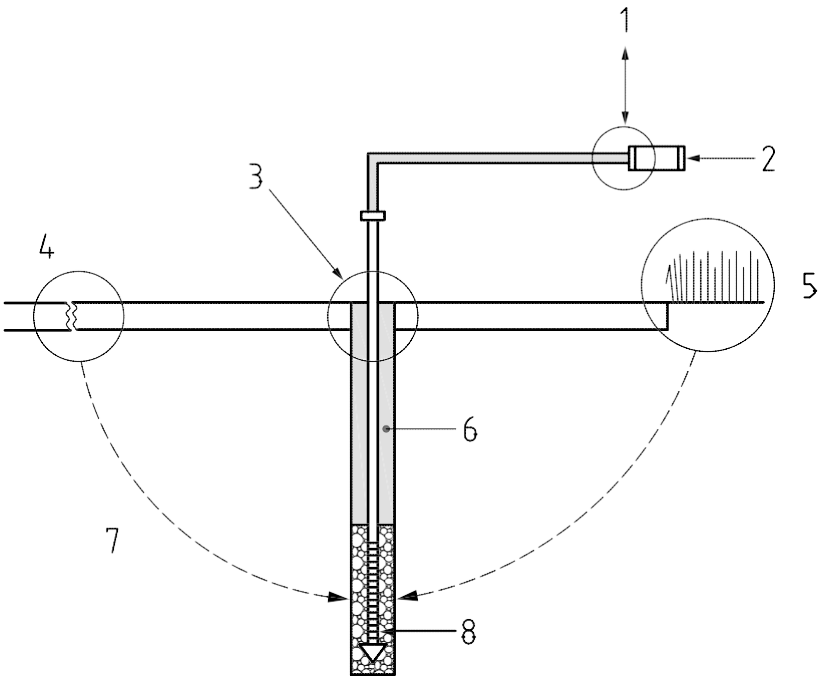

Key

1	Leakage from joints	6	Seal
2	Pump and container	7	Atmospheric air entrained
3	Surface leakage	8	Ground gas monitoring pipe
4	Cracks in ground cover		
5	Absence of hardstanding		

This figure is based on Figure 6.2 in CIRIA C682 [5].

I.2 Atmospheric (ambient) air entrainment

Atmospheric short-circuiting can occur when cracks in the hardstanding, the presence of a permeable ground cover or even underground utilities allow air to be drawn into the sampling point from the atmosphere. Testing for this process is not always straight-forward, but one approach is to actively pump ground gas from the monitoring point and analyse on-site for the concentrations of oxygen and carbon dioxide. If concentrations are comparable with those expected in ambient air, atmospheric entrainment might be occurring.

I.3 Surface leakage

A poorly sealed ground-pipe connection might allow atmospheric air to be drawn down the sampling point/well and into the tube, resulting in sample dilution. The same test used to assess for atmospheric entrainment (see **I.2**) can be used, along with several other methods, including:

- use of a tracer gas (e.g. helium) introduced at the ground beneath a shroud placed over the sampling point;
- use of a liquid compound or mixture of compounds introduced at the ground surface around the sampling point.

Bought by- Jonathan Tingley, Company - Geo-Environmental Services Ltd, on 13 March 2014 Latest version. Not to be distributed/networked. For multi-user access www.bsigroup.com/license © The British Standards Institution 2014

The ground gas sample is collected and either tested on-site for the presence of the tracer gas, or sent for laboratory analysis for the tracer gas or specific components present in the liquid compound introduced at the ground surface. Propane and helium are example of gaseous compounds and alcohol, pentane or freons are sometimes used as liquid compounds. An acceptable tracer concentration in the sample sent to the laboratory would be 10% or less of the total volume.

I.4 Leakage from above ground sampling equipment

Atmospheric entrainment can occur above ground if the joints along the sampling train are not adequately sealed. A tracer gas (such as diluted helium at a known concentration within a gas-sampling bag) can again be used to highlight leakage, where reduced recovery indicates that leakage is occurring, but an easier method is the use of in-situ pressure testing of the above ground sampling train.

Bought by- Jonathan Tingley, Company - Geo-Environmental Services Ltd, on 13 March 2014 Latest version. Not to be distributed/networked. For multi-user access www.bsigroup.com/license © The British Standards Institution 2014

Bibliography

Standards publications

For dated references, only the edition cited applies. For undated references, the latest edition of the referenced document (including any amendments) applies.

BS 3882:2007, *Specification for topsoil and requirements for use*

BS 8485, *Code of practice for the characterization and remediation from ground gas in affected developments*

BS 22475-2, Geotechnical investigation and testing – Sampling methods and groundwater measurements – Part 2: Qualification criteria for enterprises and personnel

BS EN 1232, Workplace atmospheres – Pumps for personal sampling of chemical agents – Requirements and test methods

BS EN 13528-3:2003, *Ambient air quality – Diffusive samplers for the determination of concentrations of gases and vapours –Requirements and test methods – Part 3: Guide to selection, use and maintenance*

BS EN ISO 16017-1, *Indoor, ambient and workplace air – Sampling and analysis of volatile organic compounds by sorbent tube/thermal desorption/ capillary gas chromatography – Part 1: Pumped sampling*

BS EN ISO 16017-2, *Indoor, ambient and workplace air – Sampling and analysis of volatile organic compounds by sorbent tube/thermal desorption/capillary gas chromatography – Part 2: Diffusive sampling*

BS EN ISO/IEC 17025, General requirements for the competence of testing and calibration laboratories

BS ISO 11665-1:2012, *Measurement of radioactivity in the environment – Air: radon-222 – Part 1: Origins of radon and its short-lived decay products and associated measurement methods*

BS ISO 11665-7, Measurement of radioactivity in the environment – Air: radon-222 – Part 7: Accumulation method for estimating surface exhalation rate

BS ISO 18589 (all parts), *Measurement of radioactivity in the environment – Soil*

Other publications

[1] GREAT BRITAIN. The Environmental Protection Act 1990. London: HMSO.

[2] GREAT BRITAIN. The Environmental Damage (Prevention and Remediation) Regulations 2009. London: The Stationery office.

[3] Department for Environment, Food and Rural Affairs. *Model Procedures for Management of Land Contamination*. CLR 11. Bristol: Environment Agency, 2004. ISBN 1844322955.

[4] Construction Industry Research and Information Association. WILSON, S et al. *Assessing Risks Posed by Hazardous Ground Gases to Buildings*. C665. London: CIRIA, 2007. ISBN 9780860176657. (www.ciria.org)

[5] Construction Industry Research and Information Association. BAKER, K et al. *The VOCs Handbook: Investigating, Assessing and Managing Risks from Inhalation of VOCs at Land Affected by Contamination.* C682. London: CIRIA, 2009. ISBN 9780860176822. (www.ciria.org)

[6] WILSON, S., CARD, G. & HAINES, S. *Ground Gas Handbook*. Dunbeath: Whittles Publishing, 2009. ISBN 978-1904445685

Bought by- Jonathan Tingley, Company - Geo-Environmental Services Ltd, on 13 March 2014 Latest version. Not to be distributed/networked. For multi-user access www.bsigroup.com/license © The British Standards Institution 2014

[7] The Coal Authority, Health & Safety Executive, British Drilling Association, Federation of Piling Specialists & the Association of Geotechnical and Geoenvironmental Specialists. *Guidance on Managing the Risk of Hazardous Gases when Drilling Near Coal.* CA/HSE/BDA/FPS/AGS, 2012.

[8] Construction Industry Research and Information Association. O'RIORDAN N. J. AND MILLOY, C.J. *Risk assessment for methane and other gases in the ground*. 152. London: CIRIA, 1995. ISBN 0860174344 (www.ciria.org)

[9] Construction Industry Research and Information Association. CARD, G.B. *Protecting Development from Methane*. R149. London: CIRIA, 1995. ISBN 0860174107 (www.ciria.org)

[10] Building Research Establishment and the Environment Agency. JOHNSON, R. *Protective Measures for Housing on Gas-contaminated Land.* BR414. Garston, Watford: BRE, 2001. ISBN 9781860814600

[11] Building Research Establishment. HARTLESS, R. *Construction of new buildings on gas-contaminated land.* BR212. Garston, Watford: BRE, 1991. ISBN 0-85125-513-2

[12] DEPARTMENT OF THE ENVIRONMENT, TRANSPORT AND THE REGIONS. *Passive Venting of Ground gases Beneath Buildings: Research Report*. London: Arup Environmental, 1997.

[13] WILSON, S., CARD, G. & HAINES, S. *The Local Authority Guide to Ground Gas*. London: Chartered Institute of Environmental Health, 2008. ISBN 9781904306764

[14] Construction Industry Research and Information Association. Hooker, P J & Bannon, M P. *Methane: its Occurrence and Hazards to Construction*. 130. London: CIRIA, 1993. (www.ciria.org)

[15] ENVIRONMENT AGENCY. *Decommissioning redundant boreholes and wells*. Solihull: Environmental Agency National Groundwater and Contaminated Land Centre, 2000.

[16] British Drilling Association. *Guidance for Safe Intrusive Activities on Contaminated or Potentially Contaminated Land*. Daventry: BDA, 2008.

[17] The Coal Authority. *Application for Permission to Enter or Disturb Coal Authority Mining Interests*. 2009.

[18] ASSOCIATION OF GEOTECHNICAL & GEOENVIRONMENTAL SPECIALISTS. *Site Investigation Asbestos Risk Assessment – For the Protection of Site Investigation and Geotechnical Laboratory Personnel*. Beckenham: AGE, 2012.

[19] Health and Safety Executive. *Position Statement, Carbon Monoxide*. London: HSE, 2007.

[20] Health & Safety Executive. HELA LACOTS PETEL 65/28: *Recommendations in the Report into the Bontddu Petrol Incident*. Sudbury: HSE Books, 2000.

[21] Department of the Environment 1991a**.** *Waste Management Paper No. 27: Landfill Gas: A Technical Memorandum Providing Guidance on the Monitoring and Control of Landfill Gas*. London: HSMO. ISBN 0117524883

[22] Institute of Wastes ManagemenT. *The Monitoring of Landfill Gas 2nd edition.* Northampton: IWM, 1998.

[23] NATIONAL HOUSE-BUILDING COUNCIL AND RSK GROUP. *Guidance on Evaluation of Development Proposals on Sites where Methane and Carbon Dioxide are Present*. 10627-R01(04). Milton Keynes: NHBC, 2007.

[24] Environment Agency. *Guidance on Monitoring Landfill Gas Surface Emissions*. LFTGN 07, V2. Bristol: EA, 2010.

Bought by- Jonathan Tingley, Company - Geo-Environmental Services Ltd, on 13 March 2014 Latest version. Not to be distributed/networked. For multi-user access www.bsigroup.com/license © The British Standards Institution 2014

[25] THE EUROPEAN PARLIAMENT AND THE COUNCIL OF THE EUROPEAN UNION. Directive 94/9/EC. Equipment and protective systems intended for use in potentially explosive atmospheres.

[26] THE EUROPEAN PARLIAMENT AND THE COUNCIL OF THE EUROPEAN UNION. Directive 99/92/EC. Minimum requirements for improving the safety and health protection of workers potentially at risk from explosive atmospheres.

[27] CONSTRUCTION INDUSTRY RESEARCH AND INFORMATION ASSOCIATION. CROWHURST, D. & MANCHESTER, S. *The Measurement of Methane and Other Gases from the Ground*. 131. London: CIRIA, 1993. ISBN 0860173720 (www.ciria.org)

[28] WILSON S A AND CARD G B. *Reliability and risk in gas protection design,* Ground Engineering. 32 (2**)** 32-36. London: EMAP, 1999.

[29] BOULT, S., MORRIS, P., TALBOT, S. *Research Bulletin RB 13, The Utility of Continuous Monitoring in Detection and Prediction of 9Worst Case9 Ground-Gas Concentration*. London: Contaminated Land: Applications in Real Environments (CL:AIRE), 2011.

[30] AMERICAN PETROLEUM INSTITUTE. *Collecting and interpreting soil gas samples from the unsaturated zone. A practical strategy for assessing the subsurface vapor-to-indoor-air migration pathway at petroleum hydrocarbon sites*. 4741. Washington DC, USA: API Publications, 2005.

[31] ENERGY INSTITUTE. *Soil Vapour Protocol for Assessing Hydrocarbon Sites in the UK*. London: Energy Institute, 2013.

[32] MCALARY, T. et al. *A Case Study of Soil-Gas Sampling in Silt and Clay-Rish (Low-Permeability) Soils*. Groundwater Monitoring & Remediation, Vol 29, Issue 1, pp144-152, 16 March 2009.

[33] US ENVIRONMENTAL PROTECTION AGENCY. *Compendium of Methods for the Determination of Toxic Organic Compounds in Ambient Air, Second Edition. Compendium Method TO-17 Determination of Volatile Organic Compounds in Ambient Air Using Active Sampling Onto Sorbent Tubes*. Cincinnati, Ohio, USA: USEPA. 1999.

[34] INTERSTATE TECHNOLOGY AND REGULATORY COUNCIL VAPOR INTRUSION TEAM. *Vapor intrusion pathway: a practical guideline.* Washington DC, USA: ITRC, 2008.

[35] MCALARY T. ET AL. *Quantitative passive diffusion–adsorption sampling techniques for vapour intrusion assessment*. Chicago, USA: AWMA Speciality Conference–Vapour Intrusion, 30 September 2010.

[36] GREAT BRITAIN. Building Regulations 2010 and subsequent amendments. London: The Stationery Office.

[37] SCOTLAND. Building (Scotland) Regulations 2004 and subsequent amendments. Edinburgh: The Stationery Office.

[38] GREAT BRITAIN. Building Regulations (Northern Ireland) 2000 and subsequent amendments. Belfast: The Stationery Office.

[39] DEPARTMENT FOR COMMUNITIES AND LOCAL GOVERNMENT. The Building Act 1984 and Building Regulations 2010: circular 07/2010.

[40] DEPARTMENT FOR COMMUNITIES AND LOCAL GOVERNMENT. The Building Act 1984, Building (amendment) Regulations 2011: circular 02/2011.

[41] ENVIRONMENT AGENCY. BONE, B. *Verification of Remediation of Land Contamination*. SC030114/R1. Bristol: EA, 2010. ISBN 978-1-84911-175-1

[42] SCOTLAND. The Environmental Protection Act 1990: Part IIA – Contaminated Land: Statutory Guidance: Edition 2. Edinburgh: Scottish Government, 2006. ISBN 0-7559-6097-1

Bought by- Jonathan Tingley, Company - Geo-Environmental Services Ltd, on 13 March 2014 Latest version. Not to be distributed/networked. For multi-user access www.bsigroup.com/license © The British Standards Institution 2014

[43] NORTHERN IRELAND. The Waste and Contaminated Land Order 1997: Part III. london: HMSO, 1997.

[44] DEPARTMENT FOR ENVIRONMENT, FOOD AND RURAL AFFAIRS. Environmental Protection Act 1990: Part IIA Contaminated Land Statutory Guidance. London: HMSO, April 2012.

[45] WALES. Environmental Protection Act 1990: Part IIA – Contaminated Land Statutory Guidance. Cardiff: Welsh Assembly Government, 2012.

[46] DEPARTMENT OF ENERGY AND CLIMATE CHANGE. Environmental Protection Act 1990: Part IIA – Contaminated Land – Radioactive Contaminated Land Statutory Guidance. London: DECC, 2012.

[47] DEPARTMENT FOR COMMUNITIES AND LOCAL GOVERNMENT. National Planning Policy Framework. London: DCLG, 2012.

[48] OFFICE OF THE DEPUTY PRIME MINISTER. *Planning Policy Statement 23: Planning and Pollution Control*. London: ODPM, 2004.

[49] SCOTLAND. Planning Advice Note PAN 33, Development of Contaminated Land. Edinburgh: Scottish Government, 2000.

[50] WALES. Planning Policy Wales, 4th Edition. Cardiff: Welsh Assembly Government, 2011.

[51] WALES. *Land Contamination – A Guide for Developers*. Cardiff: Welsh Local Government Association, Welsh Assembly Government and Environment Agency, 2006.

[52] GREAT BRITAIN. OFFICE OF THE DEPUTY PRIME MINISTER. Building Regulations 2000, Approved Document C – Site Preparation and Resistance to Contaminants and Moisture. London: HMSO, 2004.

[53] SCOTLAND. Building Regulations, Technical Handbook – Domestic, Section 3.1 and Technical Handbook – Non-Domestic , Section 3.1. Edinburgh: Scottish Government, 2011.

[54] NORTHERN IRELAND. *Technical Booklet - Site Preparation*. Belfast: Department of the Environment for Northern Ireland, 1994.

[55] BUILDING RESEARCH ESTABLISHMENT. SCIVYER, C. R. *Radon: Guidance on Protective Measures for New Buildings, 4th edition*. BR211. Garston, Watford: IHS BRE Press, 2007. ISBN 1848060130

[56] MILES, J. C. H., APPLETON, J. D., REES, D. M., GREEN, B. M. R., ADLAM, K. A. M. AND MYERS, A. H. *HPA-RPD-033, Indicative Atlas of Radon in England and Wales.* Chiltern: HPA, 2007.

[57] HEALTH PROTECTION AGENCY. *RCE-15, Limitation of Human Exposure to Radon*. London: HPA, 2010.

[58] GREAT BRITAIN. Health and Safety at Work, etc. Act, 1974. London: HMSO.

[59] GREAT BRITAIN. Ionising Radiations Regulations 1999. The Stationery Office. London: 1999.

[60] BUILDING RESEARCH ESTABLISHMENT. Pye, P. W. *Sealing Cracks in Solid Floors: A BRE Guide to Radon Remedial Measures in Existing Dwellings*. BR239. Garston, Watford: BRE, 1993. ISBN 0851255604

[61] BUILDING RESEARCH ESTABLISHMENT. SCIVYER, C. R. *Surveying Dwellings with High Indoor Radon Levels: A BRE Guide to Radon Remedial Measures in Existing Dwellings.* BR250. Garston, Watford: BRE, 1993. ISBN 0-85125-582-5

[62] BUILDING RESEARCH ESTABLISHMENT. SCIVYER, C. R. *Major Alterations and Conversions: A BRE Guide to Radon Remedial Measures in Existing Dwellings*, BR267. Garston, Watford: IHE BRE Press, 1994. ISBN 0851256384

Bought by- Jonathan Tingley, Company - Geo-Environmental Services Ltd, on 13 March 2014 Latest version. Not to be distributed/networked. For multi-user access www.bsigroup.com/license © The British Standards Institution 2014

[63] BUILDING RESEARCH ESTABLISHMENT. SCIVYER, C. R. & T J GREGORY, T.J. *Radon in the Workplace*. BR293. Garston, Watford: BRE, 1995. ISBN 1860810403

[64] BUILDING RESEARCH ESTABLISHMENT. SCIVYER, C. R., Cripps, A & Jaggs, M. P. R. *Radon sump systems: a BRE guide to radon remedial measures in existing dwellings, 2nd edition*. BR227. Garston, Watford: BRE, 1998. ISBN 1860812236

[65] BUILDING RESEARCH ESTABLISHMENT. *Radon: Guidance on Protective Measures for New Dwellings in Scotland.* BR376. Garston, Watford: IHS BRE Press, 1999. ISBN 1860813348

[66] BUILDING RESEARCH ESTABLISHMENT. *Radon: Guidance on Protective Measures for New Dwellings in Northern Ireland.* BR413. Garston, Watford: IHS BRE, 2001. ISBN 1860814697

[67] BUILDING RESEARCH ESTABLISHMENT. STEPHEN, R. K. *Positive Pressurisation: A BRE Guide to Radon Remedial Measures in Existing Dwellings.* BR281. Garston, Watford: IHS BRE Press, 1995. ISBN 1860810071

[68] BUILDING RESEARCH ESTABLISHMENT. *Good Repair Guide GRG 37/1, Radon Solutions in homes – Improving underfloor ventilation.* Garston, Watford: BRE, 2012.

[69] SARAD GMBH, *Application Note AN-005 EN: Quantifying of Radon Concentration in Ground gas.* Dresden: SARAD GmbH.

[70] PAPASTEFANOU, C. *Measuring radon in ground gas and groundwaters: a review*. Annals of Geophysics, 2007, 50 (4) 569-578.

[71] OLIVER, M. A., and KHARYAT, A. L. *Investigating the spatial variation of radon in soil geostatistically*. Geocomputation, 1995. Available from: www.geocomputation.org/1999/095/gc_095. (Last accessed: 20/02/2013)

[72] CONSTRUCTION INDUSTRY RESEARCH AND INFORMATION ASSOCIATION. HARRIES, C.A., WITHERINGTON, P.J. & MCENTEE, J.M. *Interpreting Measurements of Gas in the Ground*. 151. London: CIRIA, 1995. (www.ciria.org)

[73] ENVIRONMENT AGENCY. H1 Horizontal Guidance Note: Assessment & Appraisal of BAT. Bristol: Environment Agency, 2002.

[74] HEALTH AND SAFETY EXECUTIVE. *Guidance Note EH40: Occupational Exposure Limits.* Sudbury: HSE Books, 2005.

[75] GOLDSTEIN, M. *Carbon monoxide poisoning*. Journal of Emergency Nursing: JEN: Official Publication of the Emergency Department Nurses Association 34 (6): 538–542. December 2008.

[76] STRUTTMANN, T., SCHEERER, A., PRINCE, T. S., GOLDSTEIN, L.A. *Unintentional carbon monoxide poisoning from an unlikely source*. The Journal of the American Board of Family Practice 11 (6): 481–484.

[77] WORLD HEALTH ORGANIZATION. *Air Quality Guidelines for Europe – 2nd Edition*. Copenhagen: WHO, 2000

[78] VON POST, L. *Sveriges geologiska undersöknings torvinvenstering och några av dess hittills vaanna resultant*. Svenska Mosskulturfören. Tidskr. 36:1–27. 1922.

Websites

NOTE All last accessed on 20/02/2013.

www.bgs.ac.uk

http://evidence.environment-agency.gov.uk/ChemicalStandards/home.aspx

Bought by- Jonathan Tingley, Company - Geo-Environmental Services Ltd, on 13 March 2014 Latest version. Not to be distributed/networked. For multi-user access www.bsigroup.com/license © The British Standards Institution 2014

www.hpa.org.uk

www.hse.gov.uk/fireandexplosion

www.metoffice.gov.uk

www.UKradon.org

Further reading

ALLEN, M.R., BRAITHWAITE, A. & HILLS, C.C. *Trace organic compounds in landfill gas at seven UK waste disposal sites.* Vol. 31, No. 4, pp. 1054–1061. Environmental Science and Technology, 1997.

BOYLE R, CARD G, MALLET H, WILSON S & WITHERINGTON P, *Going with the flow*. pp 36-38. Ground Engineering: March 2009.

BRITISH DRILLING ASSOCIATION. *Health and safety manual for land drilling: a code of safe drilling practice*. Brentwood: BDA, 2002.

BRITISH GEOLOGICAL SURVEY. *Methane, Carbon Dioxide and Oil Seeps from Natural Sources and Mining Areas: Characteristics, Extent and Relevance to Planning and Development in Great Britain. WP/95/1.* Keyworth: BGS, 1995.

BUILDING RESEARCH ESTABLISHMENT. SMITH M. A. *Methane and development. BRE N48/82 (revised).* Garston, Watford: BRE, 1982.

CONSTRUCTION INDUSTRY RESEARCH AND INFORMATION ASSOCIATION. RAYBOULD J. B, ROWAN S P AND BARRY D. L. *Methane investigation strategies*. 150. London: CIRIA, 1995. ISBN 0860174352

DEPARTMENT FOR ENVIRONMENT, FOOD AND RURAL AFFAIRS. *Methane emissions from landfill sites in the UK*. London: DEFRA, 2003.

DEPARTMENT OF THE ENVIRONMENT, TRANSPORT AND THE REGIONS. M*ethane emissions from UK landfills. AEAT-5217.* Abingdon, Oxfordshire: AEA Technology Environment, 1999.

EKLUND, B. *Practical guidance for flux chamber measurements of fugitive volatile organic emission rates. Journal of the Air Waste Management Association*. *Vol. 42, pp. 1583–1591*. 1992. ISSN 1047-3289

ENERGY TECHNOLOGY SUPPORT UNIT. COOPER, G., GREGORY, R., MANLEY, B.J.W. AND NAYLOR, E. *Guidelines for the safe control and utilisation of landfill gas. Vol. 1, 2, 3, 4A, 4B, 5, 6. Reports ETSU B 1296 P1–P6 CWM 067A/B/C/D1/D2/E/F/92.* Harwell: ETSU, 1993.

ENVIRONMENT AGENCY (1999a). *Methane emissions from different landfill categories. R&D Technical Report P233a (CWM 141/97).* Bristol: Environment Agency.

ENVIRONMENT AGENCY (1999c). *A framework to assess the risks to human health and the environment from landfill gas. R&D Technical Report P271 (CWM 168/98).* Bristol: Environment Agency. ISBN 1 85 705254 4

ENVIRONMENT AGENCY (2000a). *Review of the viability of the use of landfill gas. R&D Technical Report P1- 442/TR.* Bristol: Environment Agency.

ENVIRONMENT AGENCY (2000d). *Monitoring methods for ambient air. Technical Guidance Note M9.* London: HMSO. ISBN 0 113 10176 7

ENVIRONMENT AGENCY (2002b). *GasSim – landfill gas risk assessment tool. P1-295*. Bristol: Environment Agency. (Also see www.gassim.co.uk. Last accessed 20/02/2013.)

ENVIRONMENT AGENCY (2002c). *Environmental assessment and appraisal of BAT. IPPC H1. Version 3.* Bristol: Environment Agency. ISBN 0113101082

Bought by- Jonathan Tingley, Company - Geo-Environmental Services Ltd, on 13 March 2014 Latest version. Not to be distributed/networked. For multi-user access www.bsigroup.com/license © The British Standards Institution 2014

ENVIRONMENT AGENCY (2002d) *Guidance on the flaring of landfill gas*. Bristol: Environment Agency. ISBN 1 84432 027 8

ENVIRONMENT AGENCY (2002e) *Investigation of the composition and emissions of trace components in landfill gas. P1-438/TR.* Bristol: Environment Agency. ISBN 1 84432 018 9

ENVIRONMENT AGENCY (2002h) *Method protocol for a biochemical methane potential (BMP) test. R&D Technical Report P1-219/TR/1.* Bristol: Environment Agency.

ENVIRONMENT AGENCY (2003c) *Interpretation of the engineering requirements of Schedule 2 of the Landfill (England and Wales) Regulations 2002. Landfill Regulatory Guidance Note 6 Version 4.* Bristol: Environment Agency.

ENVIRONMENT AGENCY 2004a) *Guidance on landfill completion*. Bristol: Environment Agency.

ENVIRONMENT AGENCY (2004d) *Guidance for monitoring landfill gas surface emissions*. Bristol: Environment Agency.

ENVIRONMENT AGENCY (2004e) *Guidance for monitoring landfill gas engine emissions*. Bristol: Environment Agency.

ENVIRONMENT AGENCY (2004f) *Guidance for monitoring trace components in landfill gas*. Bristol: Environment Agency.

GENDEBIEN, A., PAUWELS, M., CONSTANT, M., LEDRUT- DAMANET, M.J. & WILLUMSEN, H.C. *Landfill gas: from environment to energy*. Luxembourg: European Commission, 1992. ISBN 9 28 263672 0

HARTLESS, R.P. *Developing a risk assessment framework for landfill gas - incorporating meteorological effects. Proceedings of Waste 2000: waste management at the dawn of the Third Millennium. pp. 41–50.* Stratford-upon-Avon: 2000.

INTERDEPARTMENTAL COMMITTEE ON THE REDEVELOPMENT OF CONTAMINATED LAND. *Notes on the development and after-use of landfill sites, 8th edition. 17/78.* London: Department of the Environment, 1990.

LONDON ENVIRONMENTAL SUPPLEMENT. PECKSEN G. N. *Methane and the development of derelict land. No.13.* London: Greater London Council, 1985.

SEGHERS, D., MERTENS, B., VAN DRIESSCHE, K. AND VERSTRAETE, W. *Evaluation of activity, abundance and community structure of the methane oxidizing population in a landfill cover soil.* University of Ghent, Faculty of Agricultural and Applied Biological Sciences. Ghent, 7 November 2003.

Bought by- Jonathan Tingley, Company - Geo-Environmental Services Ltd, on 13 March 2014 Latest version. Not to be distributed/networked. For multi-user access www.bsigroup.com/license © The British Standards Institution 2014

Bought by- Jonathan Tingley, Company - Geo-Environmental Services Ltd, on 13 March 2014 Latest version. Not to be distributed/networked. For multi-user access www.bsigroup.com/license © The British Standards Institution 2014

This page deliberately left blank

NO COPYING WITHOUT BSI PERMISSION EXCEPT AS PERMITTED BY COPYRIGHT LAW

British Standards Institution (BSI)

BSI is the national body responsible for preparing British Standards and other standards-related publications, information and services.

BSI is incorporated by Royal Charter. British Standards and other standardization products are published by BSI Standards Limited.

About us

We bring together business, industry, government, consumers, innovators and others to shape their combined experience and expertise into standards -based solutions.

The knowledge embodied in our standards has been carefully assembled in a dependable format and refined through our open consultation process. Organizations of all sizes and across all sectors choose standards to help them achieve their goals.

Information on standards

We can provide you with the knowledge that your organization needs to succeed. Find out more about British Standards by visiting our website at bsigroup.com/standards or contacting our Customer Services team or Knowledge Centre.

Buying standards

You can buy and download PDF versions of BSI publications, including British and adopted European and international standards, through our website at bsigroup.com/shop, where hard copies can also be purchased.

If you need international and foreign standards from other Standards Development Organizations, hard copies can be ordered from our Customer Services team.

Subscriptions

Our range of subscription services are designed to make using standards easier for you. For further information on our subscription products go to bsigroup.com/subscriptions.

With **British Standards Online (BSOL)** you'll have instant access to over 55,000 British and adopted European and international standards from your desktop. It's available 24/7 and is refreshed daily so you'll always be up to date.

You can keep in touch with standards developments and receive substantial discounts on the purchase price of standards, both in single copy and subscription format, by becoming a **BSI Subscribing Member**.

PLUS is an updating service exclusive to BSI Subscribing Members. You will automatically receive the latest hard copy of your standards when they're revised or replaced.

To find out more about becoming a BSI Subscribing Member and the benefits of membership, please visit bsigroup.com/shop.

With a **Multi-User Network Licence (MUNL)** you are able to host standards publications on your intranet. Licences can cover as few or as many users as you wish. With updates supplied as soon as they're available, you can be sure your documentation is current. For further information, email bsmusales@bsigroup.com.

BSI Group Headquarters

389 Chiswick High Road London W4 4AL UK

Revisions

Our British Standards and other publications are updated by amendment or revision.

We continually improve the quality of our products and services to benefit your business. If you find an inaccuracy or ambiguity within a British Standard or other BSI publication please inform the Knowledge Centre.

Copyright

All the data, software and documentation set out in all British Standards and other BSI publications are the property of and copyrighted by BSI, or some person or entity that owns copyright in the information used (such as the international standardization bodies) and has formally licensed such information to BSI for commercial publication and use. Except as permitted under the Copyright, Designs and Patents Act 1988 no extract may be reproduced, stored in a retrieval system or transmitted in any form or by any means – electronic, photocopying, recording or otherwise – without prior written permission from BSI. Details and advice can be obtained from the Copyright & Licensing Department.

Useful Contacts:

Customer Services
Tel: +44 845 086 9001
Email (orders): orders@bsigroup.com
Email (enquiries): cservices@bsigroup.com

Subscriptions
Tel: +44 845 086 9001
Email: subscriptions@bsigroup.com

Knowledge Centre
Tel: +44 20 8996 7004
Email: knowledgecentre@bsigroup.com

Copyright & Licensing
Tel: +44 20 8996 7070
Email: copyright@bsigroup.com

bsi.

...making excellence a habit.™

Bought by- Jonathan Tingley, Company - Geo-Environmental Services Ltd, on 13 March 2014 Latest version. Not to be distributed/networked. For multi-user access www.bsigroup.com/license © The British Standards Institution 2014