© This drawing and the building works depicted are the copyright of the Engineers and may not be reproduced except by written permission.

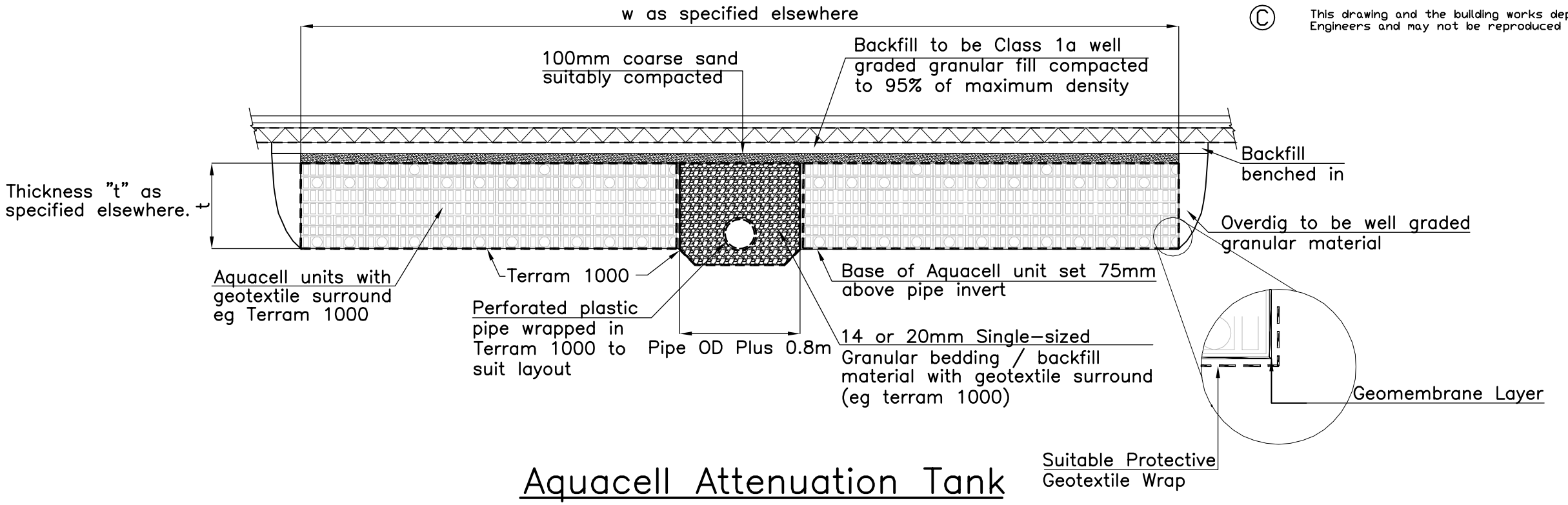

Aquacell Attenuation Tank

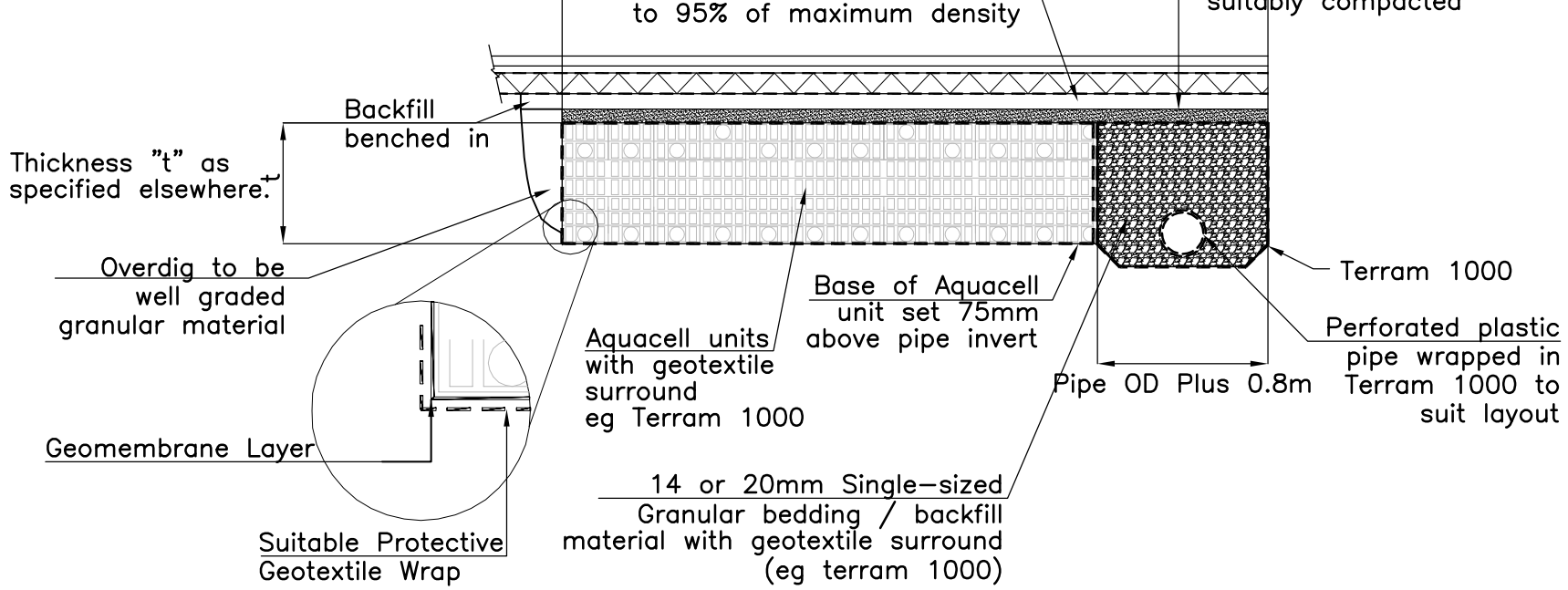

Alternative Layout

Revisions

A Pipe note revised to show Terram — MH DRP 02/12

B Pipe note revised and Membrane added — JG DRP 09/13

NOLAN ASSOCIATES
CONSULTING CIVIL & STRUCTURAL ENGINEERS
EDGBASTON HOUSE, 3 DUCHESS PLACE,
HAGLEY ROAD, EDGBASTON, BIRMINGHAM B16 8NH
TEL: 0121–454 3099 FAX: 0121–454 3059
E–mail: enquiries@nolanassociates.co.uk

Drawing Title

Standard Details
Aquacell Attenuation Tank

Drg by	Chk by	Date
MH	DRP	2009

Project No	Drawing No
	D48 B