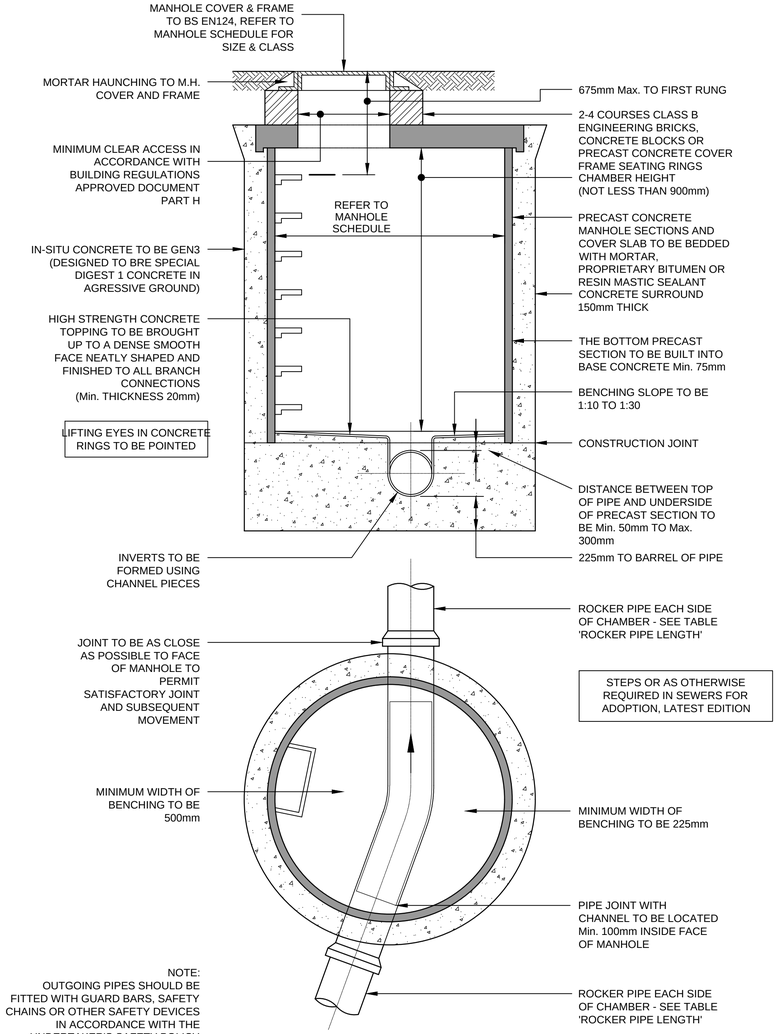

TYPICAL MANHOLE DETAIL – TYPE B

Max. DEPTH FROM COVER LEVEL TO SOFFIT OF PIPE 3m

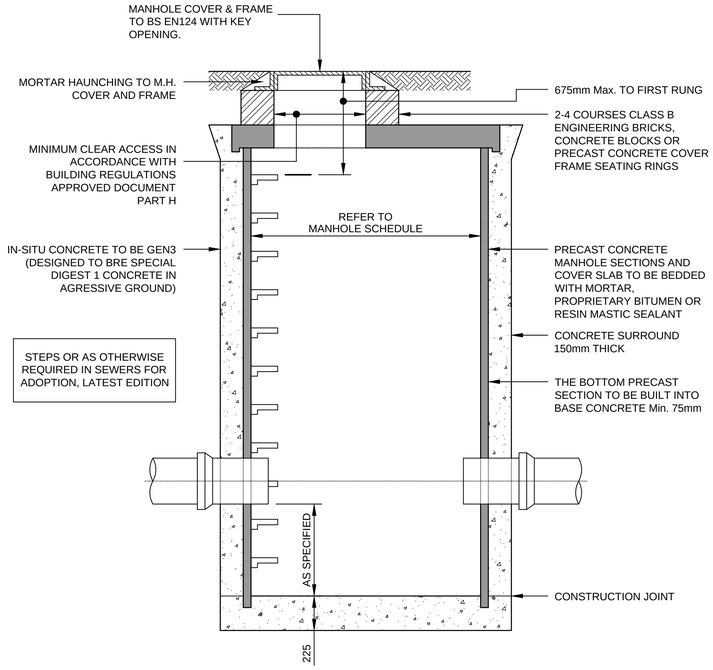

PC RING CATCHPIT MANHOLE DETAIL

THIS DRAWING IS TO BE READ IN CONJUNCTION WITH PEP DWG No. 451816 1205, 1206 & 1207.

GENERAL NOTES

1. THIS DRAWING IS TO BE READ IN CONJUNCTION WITH ALL RELEVANT DETAILS, DRAWINGS, SPECIFICATIONS, REPORTS AND OTHER DOCUMENTS ISSUED BY THE ARCHITECT AND OTHER DESIGN TEAM MEMBERS.
2. REPORT ANY DISCREPANCIES IMMEDIATELY AND AWAIT FURTHER INSTRUCTIONS BEFORE PROCEEDING WITH ANY ASSOCIATED CONSTRUCTION WORKS. IF A DETAIL APPEARS UNCLEAR, OR THERE IS ANY DOUBT, THEN CONTACT PEP FOR FURTHER ADVICE.
3. CONTRACTORS ARE NOT TO WORK TO THIS DRAWING UNLESS IT IS AT 'FOR CONSTRUCTION' STATUS, AS THE DESIGN MAY NOT HAVE BEEN FINALISED.
4. DO NOT SCALE FROM THIS DRAWING. WORK TO GIVEN DIMENSIONS ONLY.

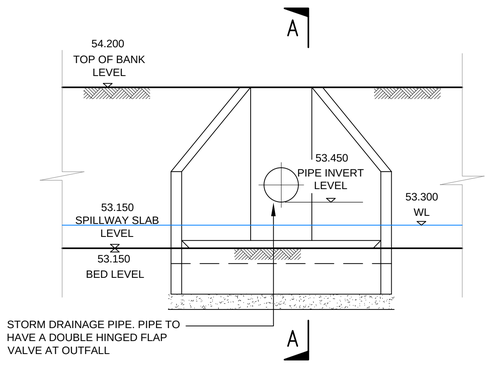

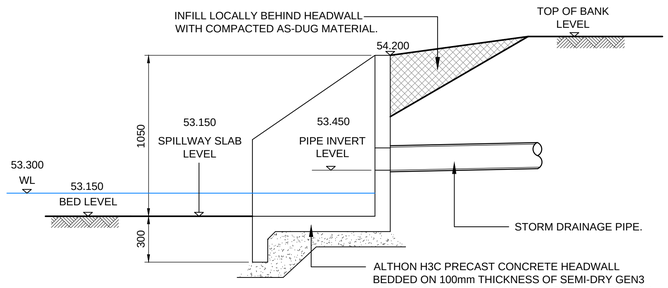

TYPICAL PRECAST CONCRETE HEADWALL DETAIL TO BROOK

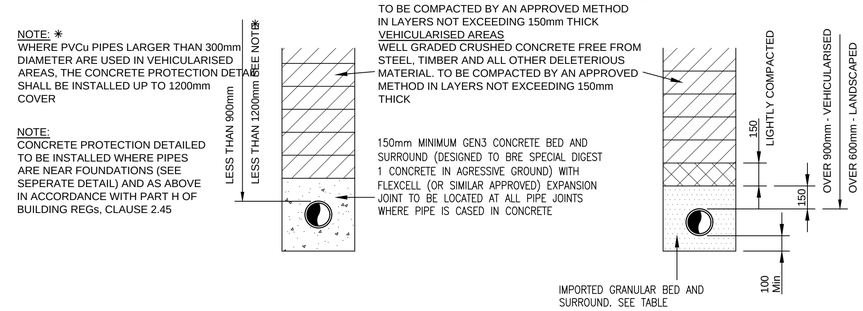

UNDER 900mm
(under 1200mm see Note ✳)

OVER 900mm-VEHICULAR
OVER 600mm-LANDSCAPED

PIPE BEDDING DETAILS CONCRETE, CLAY & PVCu PIPES

Granular materials for Pipe Bedding

TO BE EITHER
Nominal single size aggregate complying with table 4 of BS 882:1992 as follows:

DN 100 10mm size
DN 150 10mm or 14mm size
DN 200 to DN 300 10mm, 14mm or 20mm size
DN 375 to DN 525 14mm or 20mm size
DN 600 and above 14mm or 20mm or 40mm size

OR
Graded aggregate complying with table 4 of BS 882:1992 as follows:

DN 100 14mm to 5mm
DN 150 to DN 525 20mm to 5mm or 14mm to 5mm
DN 600 and above 40m to 5mm or 20mm to 5mm or 14mm to 5mm

REV	BY	CHK	AMENDMENTS	DATE

PEP Civil & Structures Ltd
PEP House, Stoney Lane, Bourne End, Hemel Hempstead, Herts, HP1 2SB
01442 869400 www.pepgroup.co.uk design@pepgroup.co.uk

Jarvis
Homes of Distinction

PROJECT
ICKLEFORD MANOR
TURNPIKE LANE
ICKLEFORD, HERTFORDSHIRE

TITLE
STORM DRAINAGE OUTFALL TO WATERCOURSE - DRAINAGE CONSTRUCTION DETAILS

DRAWN	CHECKED	APPROVED
PG	GR	GR
SCALE	ORIGINAL PAPER SIZE	FIRST ISSUE DATE
VARIES	A1	26.01.2018

PROJECT	ORIGINATOR	VOLUME	LEVEL	TYPE	ROLE	NUMBER
451816	PEP	00	XX	DR	D	1208

STATUS	SUITABILITY DESCRIPTION
D2	SUITABLE FOR TENDER

REVISION	REVISION DESCRIPTION	PEP PROJECT REF.
P01.1	PRELIMINARY	451816

© PEP Civil & Structures Ltd - This drawing is copyright and must not be reproduced wholly or in part without prior permission.