Andrew Belson
Arboricultural Consultant

Arboricultural Method Statement

Land Adj. to 24 Lucas Lane, Ashwell

Client:	Oakbridge Bespoke Homes Ltd The Priory High Street Redbourn Herts AL3 7LZ
Date of inspection:	5th March 2018
Layout reference:	504-03
Prepared by:	Andrew Belson Dip.Arb.RFS, M.Arbor.A, Tech.Cert.Arbor.A
Date of report:	26th March 2018
Report Ref:	3385.Ashwell.Baldock.Oakbridge.
Plan Ref(s):	Tree Protection Plan: 3385.Ashwell.Baldock.Oakbridge.TPP

DOCUMENT HISTORY

Revision	Purpose of issue	Originated	Reviewed	Approved	Date
-	Discharge of Condition 6	AMB	TC	AMB	26/03/18

I hope you find this report satisfactory. If you need any more information regarding this assessment, please contact the office below.

Signed:



Andrew Belson
Arboricultural Consultant
29b High Street East
Uppingham
Rutland LE15 9PY
T: 01572 823637
E: info@belsontreesurvey.co.uk
www.belsontreesurvey.co.uk

A M Belson

Dip.Arb.RFS, M.Arbor.A, Tech.Cert.Arbor.A

Date: 26th March 2018

This report is the property of Andrew Belson Arboricultural Consultant, it is not reproduced, retained or disclosed to any unauthorised person, either wholly or in part without the written consent of Andrew Belson Arboricultural Consultant.

Contents

1 INTRODUCTION 1
2 THE SITE 2
3 SUPERVISION AND MONITORING 3
4 ARBORICULTURAL WORKS 4
5 PROTECTIVE MEASURES 5
6 CONSTRUCTION PHASE 8
7 POST CONSTRUCTION 11
APPENDIX A – TREE PROTECTION PLAN 12
APPENDIX B – BARRIERS TO BS5837-2012 13
APPENDIX C – POSTER TO BE FIXED TO BARRIERS 15

1 INTRODUCTION

1.1 Instructions

1.1.1 This method statement was commissioned by Oakbridge Bespoke Homes Ltd with instructions to carry out an assessment of the proposed development with regard to the protection of trees on or adjacent to the site, and to produce recommendations for work methodologies to arboricultural best practice in line with the recommendations of BS5837: 2012.

1.1.2 The purpose of this document is to discharge Condition 6 of the Conditions cited in the Consent for Application No: 17/01807/1.

1.1.3 This document is accompanied by:

- Evidence of a tree survey conducted to BS5837:2012, including tree categorization (BS5837 section 4.4 and 4.5) (see Appendix A)
- A Tree Protection Plan illustrating the proposed methodology for the management and protection of the trees on or adjacent to the site with specific reference to the proposed planning drawing. (Drawing ref: 3385.Ashwell.Baldock.Oakbridge.TPP provided with this report, see also Appendix C).

1.2 Source documents

1.2.1 The drawings that have been used to inform this method statement are:

- Planning drawing: 504-03

1.2.2 Protective measures have been developed and specified in accordance with the recommendations of BS5837: 2012 'Trees in Relation to design, demolition and construction', including relevant terms, definitions and Root Protection Area calculations.

1.2.3 Note: This assessment is layout-specific therefore cannot be generalised to other proposed designs.

2 THE SITE

2.1 Development details

2.1.1 The consented proposal is for the erection of 4 dwellings with new vehicular access off Lucas Lane.

2.2 Statutory implications

2.2.1 Trees and other vegetation can often provide nesting, roosting and feeding opportunities for protected species, including bats. Providing guidance on these issues is outside my expertise, so I recommend that appropriate advice is sought before any tree work proceeds on site.

2.2.2 Full Planning Consent overrides the need for a Tree Preservation Order works application or for the need to give Notice under the Conservation Area legislation.

2.2.3 The National Planning Policy Framework provides information and guidance on the issues raised by this legislation. See, for example:

http://planningguidance.communities.gov.uk/blog/guidance/tree-preservation-orders/

3 SUPERVISION AND MONITORING

3.1.1 It is important that the tree protection measures are understood and adopted at all levels from client to project manager and any sub-contractors in order that the measures can be successful.

3.1.2 A qualified Arboricultural Consultant will be retained during the period of construction to:

- meet with the treework contractor, groundworks contractor and the construction team prior to any works commencing on site to discuss the treeworks needed; the implementation of the tree protection measures; the location of the site compound and facilities (if not already known) and any phased construction that may affect the protection of trees
- inspect barriers and ground protection prior to the commencement of construction or demolition

3.1.3 Communication between the Client, Main Contractor (and their sub-contractors), the Project Manager and the Arboriculturalist are of high importance.

3.1.4 The Site Manager will monitor the physical and managed protective tree measures continually.

4 ARBORICULTURAL WORKS

4.1 Standards

4.1.1 Tree work is skilled and potentially dangerous work, which must be carried out by trained and certificated staff working to BS3998: 2010 and working in accordance with the various Regulations within the Health and Safety at Work Act 1974

4.1.2 Contractors must have Public Liability Insurance (preferably £5 million) and Employer's Liability Insurance (preferably £10 million)

4.1.3 Machinery and equipment must be maintained, inspected and operated in accordance with the various Regulations within the Health and Safety at Work Act 1974

4.1.4 The British Standard 5837: 2012 'Trees in Relation to Design, Demolition and Construction' gives detailed guidance on the implications of constructing near to trees.

4.2 Prior to works

4.2.1 Tree work must be the first operation, before any other activity on site involving plant, machinery or materials.

4.2.2 Before the commencement of any treeworks, the contractor will ensure that the proper checks for bats and nesting birds have been carried out by an appropriately-qualified inspector.

4.2.3 The Contractor will be responsible for producing their own Method Statement for the works that will include Risk Assessments, staff profiles and certification, machinery and equipment inspection records and certificates.

4.2.4 Disposal of timber, brash and other arising to be agreed with the Client.

4.3 Work required

4.3.1 Prune Horse Chestnut NT1 to reduce the height by up to 5m and reduce the lateral spread by up to 3m; lift the crown to 3.5m and remove any dead wood greater then 25mm diameter.

4.3.2 Cut back Group B to the centerline to facilitate development.

5 PROTECTIVE MEASURES

5.1 Barriers

5.1.1 Once the treeworks are complete, a barrier to Fig 2 BS5837 will be erected where shown by the broad blue line and to Fig 3 where shown by the dashed broad blue lines on the Tree Protection Plan (Ref: 3385.Ashwell.Baldock.Oakbridge.TPP, Appendix C). See Appendix D for barrier illustrations.

5.1.2 Weather-proof notices stating: 'PROTECTED AREA – DO NOT ENTER' to be erected on the fencing (example in Appendix E) not less than 5m apart.

5.1.3 Temporary access to the protected area will be by permission of the LPA arboriculturalist.

5.1.4 The site manager will assess the integrity of the protective barrier protection measures continually. Any shortcomings must be rectified to the original specifications immediately.

5.1.5 Barriers will remain in place until the end of the main construction period.

5.1.6 The Site Manager will keep a copy of the Tree Protection Plan on site for reference during construction and for site induction where staff or contractors' work may implicate working near trees so they understand the purpose of the measures.

5.2 Ground Protection

5.2.1 Ground within the root protection area of Horse Chestnut NT1 that cannot be fenced will be protected with a heavy-duty panel-based ground protection system laid over a 50mm thick covering of chipped woodmulch before any construction starts and be retained in-situ until the end of the main development period. Areas for ground protection are shown by the blue crosshatch on drawing 3385.Ashwell.Baldock.Oakbridge.TPP.

- LIVE (formerly Eve) provide Trakway access systems in timber, aluminium or plastic for a variety of potential loads. Their Emtek Mat is particularly designed for use in boggy and extremely wet areas (see). See http://www.livetrakway.com for more details or call 08700 76 76 76).



- Alternatively, Ground-Guards provide a range of ground protection mats from lightweight to heavy-duty. See http://www.ground-guards.co.uk for more details or call 0113 267 6000).





- Start Traffic Ltd stock medium and heavy-duty ground protection mats with coarse tread patterns to provide traction in all weathers. See https://starttraffic.uk/ for more details or call 01905 700 340)



6 CONSTRUCTION PHASE

6.1.1 Once the adequacy of the barrier and ground protection has been signed off by the Project Arboriculturalist, development will then continue in accordance with the Approved Plans.

6.1.2 No fires will be lit on site

6.1.3 No storage or discharge of materials within the area covered by ground protection

6.1.4 No mixing of cement or dispensing of fuel or chemicals within 15 metres of the Horse Chestnut

6.1.5 No stripping of topsoil, excavation or changing of levels to occur within the RPA of Horse Chestnut NT1 other than that specified at 6.3 below.

6.1.6 Any damage that occurs to the Horse Chestnut during construction will be rectified to BS3998: 2010.

6.1.7 The tree will not be used as an anchor point for winching or for supporting wires/cables.

6.2 Installation of Services

6.2.1 A common soakaway will be located within the parking area.

6.2.2 Any trenching for the installation of services or other excavations for soakaways etc. will be located at least 1m from the radial extent of the RPAs drawn.

6.3 Construction of Parking Area

6.3.1 Once all the main construction activity is complete, the ground protection panels within the car park area will be removed and the barrier relocated as-per the drawing.

6.3.2 The area denoted by the blue hexagonal hatch on drawing 3385.Ashwell.Baldock.Oakbridge.TPP (see Appendix C) will be paved over the existing surface level so far as practical with the use of a cellular confinement system in accordance with the following specification:

- The soil in the vicinity of Horse Chestnut NT1 (but not within the tree's root protection area) will be sampled and tested in a laboratory for the California Bearing Ratio (CBR). The final specification of the parking court will be calculated by an engineer using the CBR figure derived from the laboratory testing and with knowledge of the type of final paved finish approved elsewhere.
- The engineer will set out the area for finished levels that take account of the full depth of the geoweb and paved finish.
- The Project arboriculturalist will be in attendance for the installation of the no-dig surfacing.
- The vegetable layer of soil will be carefully removed by hand using hand tools only to a depth of no more than 75mm
- A filter membrane such as 'Terram 1000' will be laid over the excavated area. Filter membranes can be sourced from most builder's merchants.



- A cellular confinement system to the specified profile depth will be laid over the membrane. Options include:

  - The Geoweb® Tree Root Protection System offered by Greenfix UK (see http://greenfix.co.uk for more details or call 01608 666027).



  - Cellweb® Tree Root Protection (TRP) from Geosynthetics Limited (see http://www.geosyn.co.uk or call 01455 617 139)

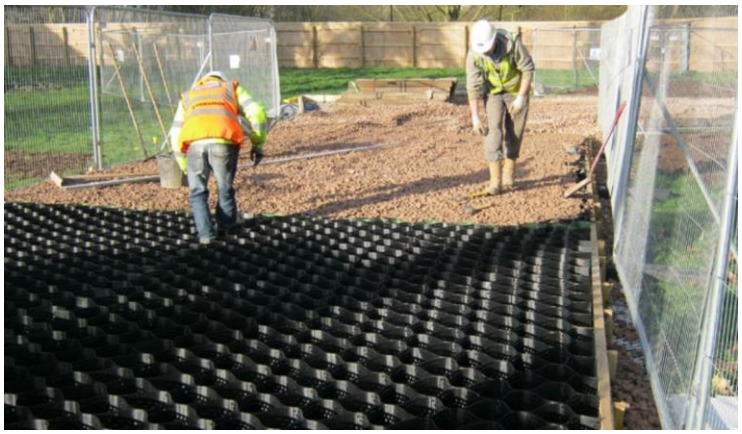

- If possible, the driveway edgings will be formed with timber edging boards supported by driven stakes. If concrete kerbs and haunching is essential, kerbs and concrete will be laid on top of the cellular confinement system and secured by driven reinforcing rods or similar.

- The cellular confinement system will be backfilled with 20-40mm no-fines graded stone and compacted, adding more aggregate as necessary to bring to level.

- The prepared surface will be finished with gravel or a SuDS compliant block paving, noting that the block paving will affect the finished level of the parking area.

7 POST CONSTRUCTION

7.1 General notes

7.1.1 Once all the construction and hard landscaping works are completed, the protective barriers will be removed and the landscaping works will be completed.

7.1.2 Soil cultivation within the previously protected zones (i.e. within the Root Protection Areas) will be carried out by hand only. No machine cultivation will take place within these zones whatsoever.

7.1.3 Planting within Root Protection Areas will be carried out by hand using hand tools only.

7.1.4 The Horse Chestnut will be re-inspected post-development by a qualified arboriculturalist and any works arising carried out within the time limits specified.

7.2 Paving

7.2.1 Paving laid within root protection areas will be constructed with a minimum of excavation. Excavation will be limited to 50mm below the existing ground level.

APPENDIX A – TREE PROTECTION PLAN

The Tree Protection Plan is pictured below. A full-sized version of the plan (Filename: 3385.Ashwell.Baldock.Oakbridge.TPP) has been provided with this file.

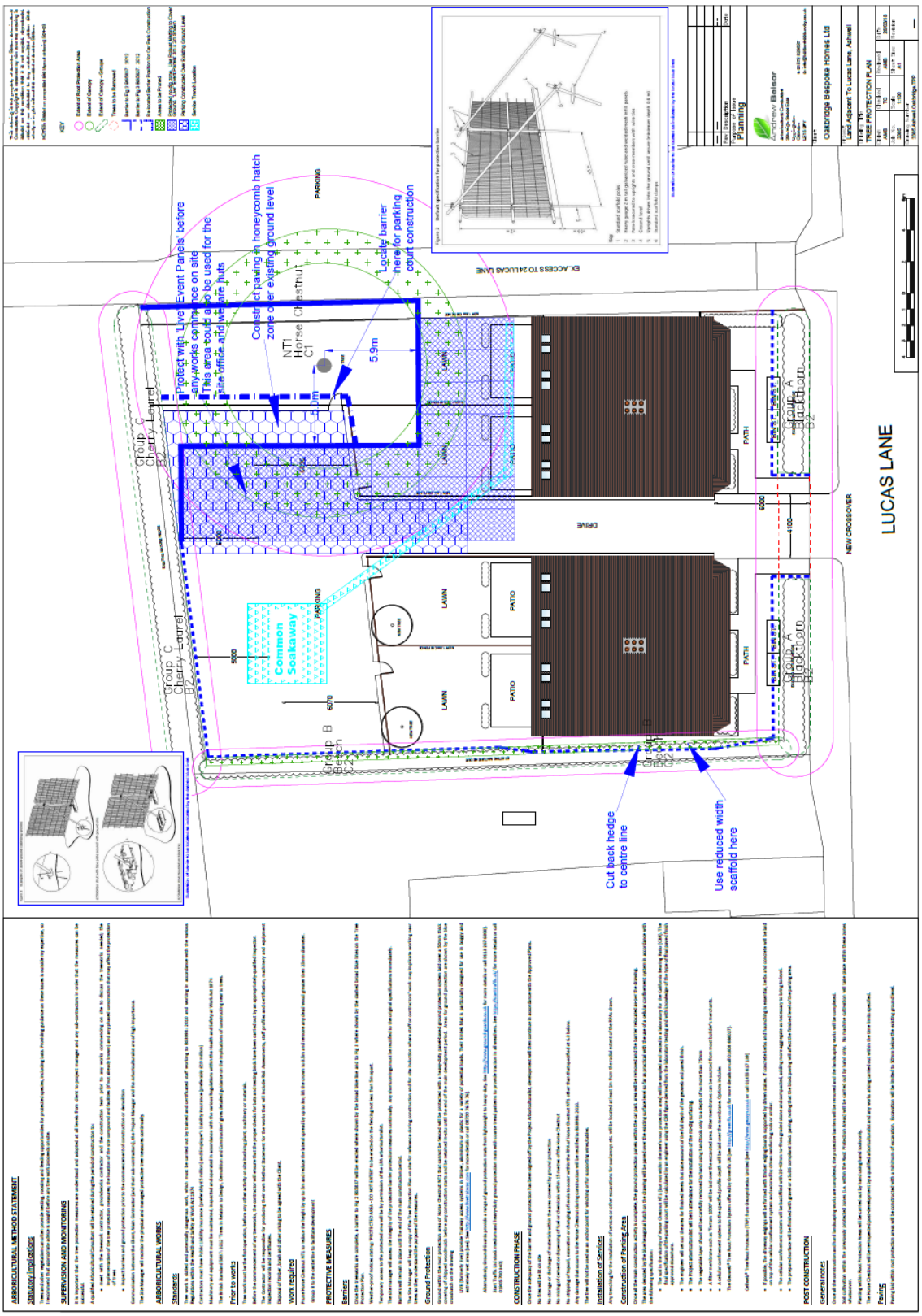

APPENDIX B – BARRIERS TO BS5837-2012

Figure 2 **Default specification for protective barrier**

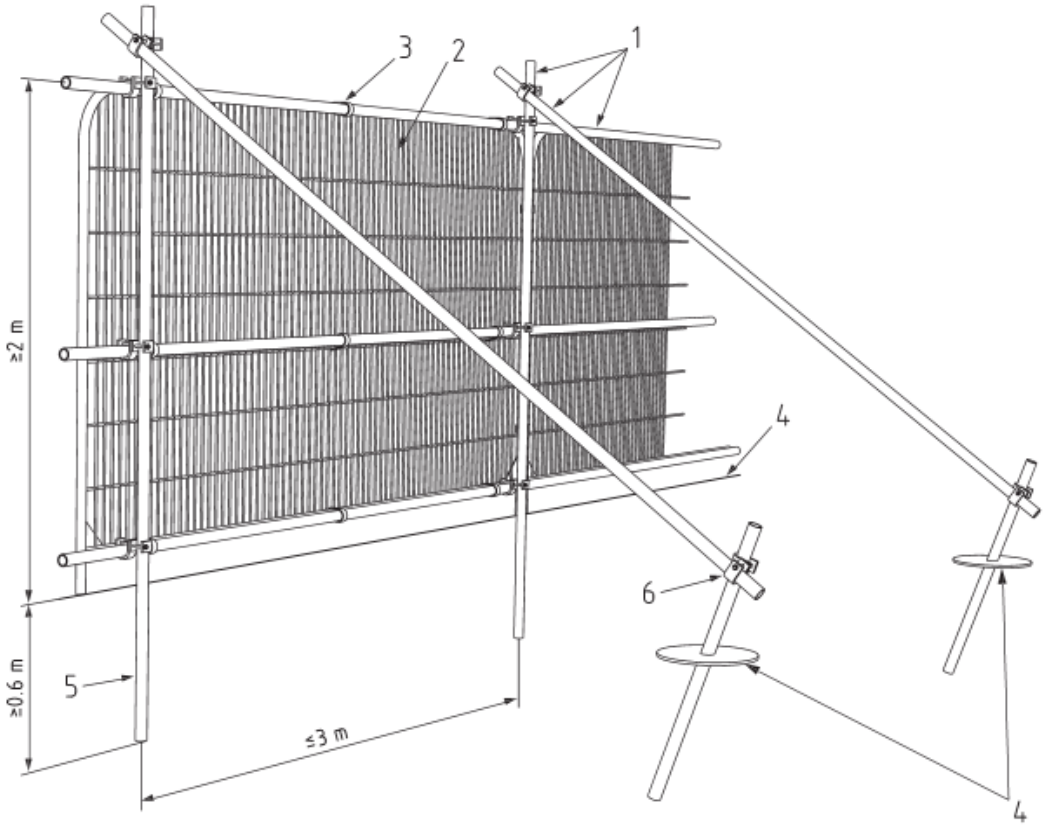

Key

1 Standard scaffold poles
2 Heavy gauge 2 m tall galvanized tube and welded mesh infill panels
3 Panels secured to uprights and cross-members with wire ties
4 Ground level
5 Uprights driven into the ground until secure (minimum depth 0.6 m)
6 Standard scaffold clamps

.

BRITISH STANDARD **BS 5837:2012**

Figure 3 **Examples of above-ground stabilizing systems**

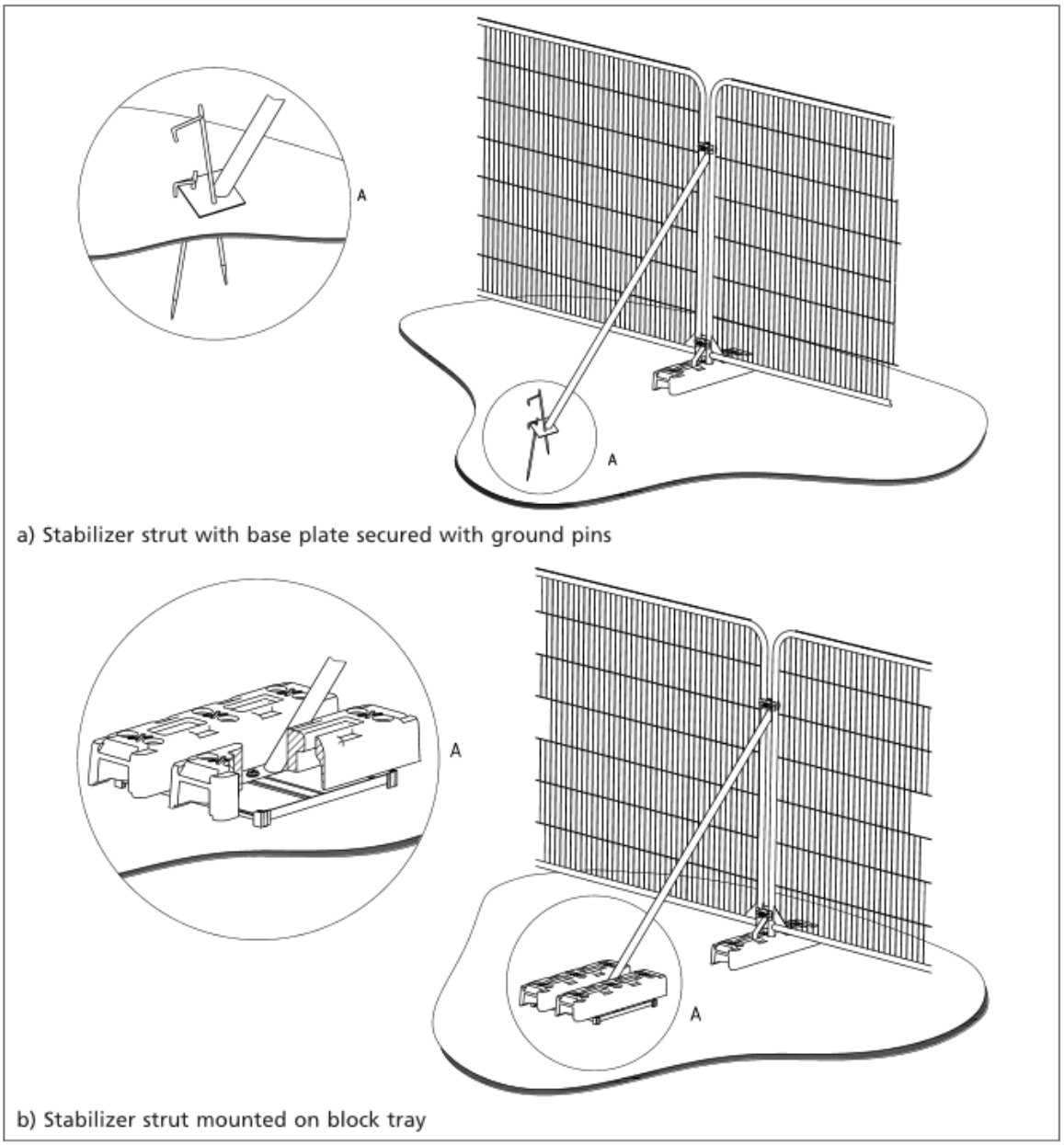

a) Stabilizer strut with base plate secured with ground pins

b) Stabilizer strut mounted on block tray

APPENDIX C – POSTER TO BE FIXED TO BARRIERS

PROTECTED AREA

DO NOT ENTER

(WITHOUT PERMISSION)

This barrier is designed to protect these trees.

PLEASE REPORT ANY BREACH IN THE BARRIER TO THE SITE MANAGER