STORMSURE+ SECTION DETAILS

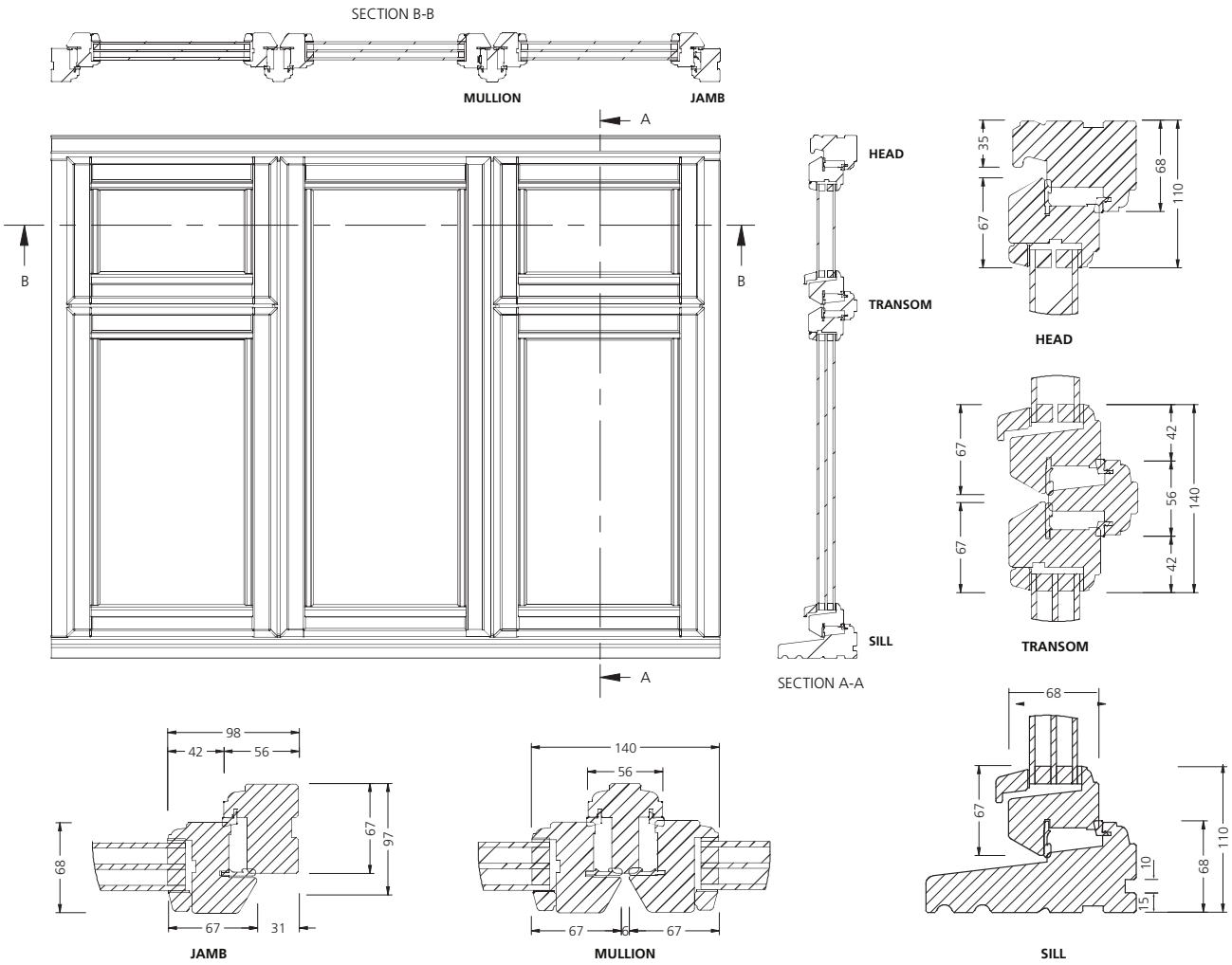

SIZE LIMITATIONS

Our Stormsure casement range is available as standard sizes or made to measure. When specifying made to measure products, the below limitations should be used as a guide to what can be manufactured.

	Min Sash Width (mm)	Min Sash Height (mm)	Max Sash Width (mm)	Max Sash Height (mm)
STORMSURE				
Side hung	400	400	800	1600
Top hung	400	400	1200	1480
STORMSURE +				
Side hung	400	400	800	1600
Top hung	400	400	1200	1500

Limitations for projecting hinges

	Min Frame Width (mm)	Min Frame Height (mm)	Max Frame Width (mm)	Max Frame Height (mm)	Max Frame Area (mm^2)
Frame	300	300	3000	2400	2500

Including direct glazed and fixed sash

SBD fixed sash: Max frame width is 1460mm, max frame height is 2350mm.

Please note, configuration limitations vary within the min/max dimensions due to weight and sash proportions.
For further detailed sizing please contact our estimating department on 0845 1222892.