Scale 1:2

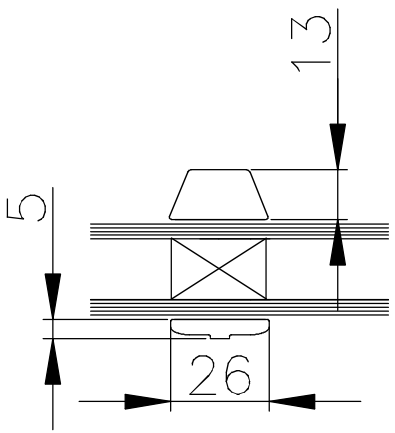

Simulated York Conservation Frett Section

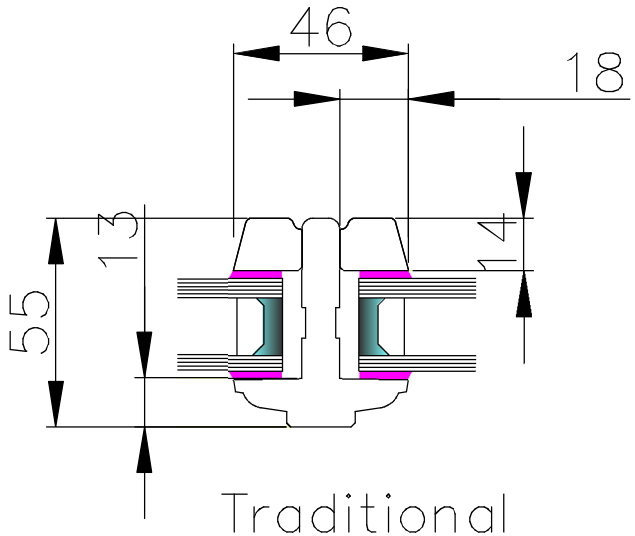

Traditional Beaded Divided Light Section

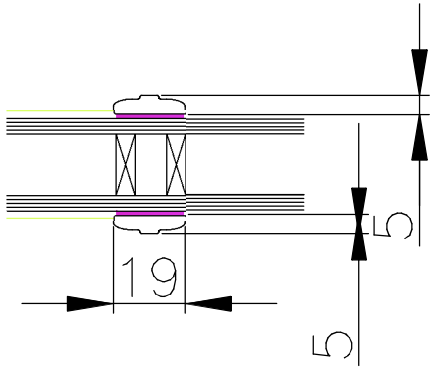

Simulated Divided Light Section
Note: To be phased out with York Conservation Frett

REV	DRAWN BY	BA NO (If applicable)	DATE
1	NP		15.11.12

MELTON WINDOWS

R&D DEPARTMENT, WOODHOUSE MILL, SHEFFIELD, UK
DO NOT SCALE OR GUESS - IF IN DOUBT, ASK!

JELD-WEN OWN THE COPYRIGHT IN THIS DRAWING WHICH MUST NOT BE REPRODUCED OR UTILISED OTHER THAN FOR THE PURPOSE INTENDED BY THEM WITHOUT PRIOR APPROVAL

A4

TOLERANCES AS PER STANDARD TOLERANCE SHEET

UNSTATED SCALE 1:1

TITLE:
VERTICAL SLIDER
HORIZONTAL SECTION

FIRST CREATED ON : 22.07.11

DWG NO.: XD11091 003

SHEET NO: 1 OF 1